WaterMaster 35 Evo 2

Direct gas fired condensing water heater

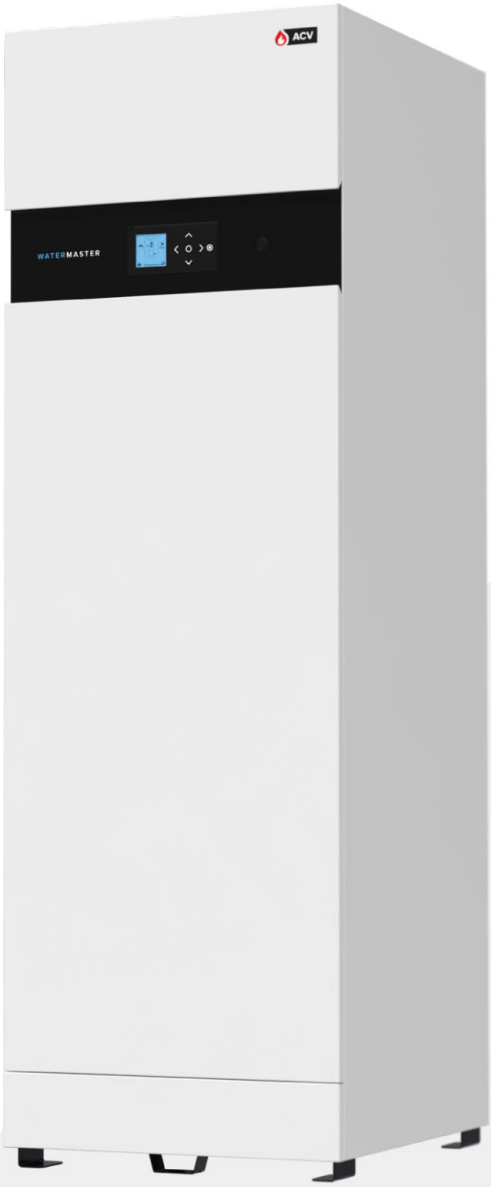

Peak 1st hour: 749 l/h. Continuous flow 662 l/h (at 60°C)

Modbus as standard

Tank-in-tank heat exchange technology

Internal time clock

ErP class A

Exceeds all current legislation requirements

5

5 year warranty*

kiwa CERTIFIED KUKreg4 ATS 3

A XXL

CE

acv.com/gb |

*Terms and conditions apply visit acv.com/gb for more information

WaterMaster 35 Evo 2
Technical data & dimensions

Performance

Maximum input (heating) NCV (GCV)	kW	34.9
Minimum input (heating)	kW	7
EN89 Part L efficiency (NCV)	%	108.5
Combustion efficiency at 100% (GCV)	%	98.2

ErP

Water heating efficiency class		A
Seasonal water heating efficiency (ErP)	%	93.2
Standby loss DT 30K	W	79
Standby loss DT 45K	W	124
Declared load profile		XXL
Sound power level indoors LWA (BSEN15036-1)	dB	60

Combustion

Gas Inlet Pressure (NG)	mbar	18-23
Gas flow rate (max output)	m3/h	3.64
Nox class (EN15502)		6
Nox weighted (GCV) (EN15502)	mg/kWh	29.5

Flue

Flue connection		80/125
Max flue run length (concentric)	m	39
Max allowed flue pressure drop	Pa	130

Electrical

Voltage	V~	230
Fuse Rating	A	16
Electrical power consumption Max	W	111
Electrical power consumption Standby	W	3

General

Storage capacity (total)	L	196
Storage capacity (domestic hot water)	L	96
Connection - DHW		1" M
Connection - gas		3/4" M
Max operating temperature (DHW)	°C	75
Max service pressure (DHW)	bar	8.6
Weight (empty)	kg	177
Weight full	kg	373

DHW Performance

Peak 10 min flow @ 40°C (30°C ΔT)	L/10'	408
Peak 1st hour flow @ 40°C (30°C ΔT)	L/60'	1328
Continuous flow @ 40°C (30°C ΔT)	L/h	1104
Peak 10 min flow @ 45°C (35°C ΔT)	L/10'	339
Peak 1st hour flow @ 45°C (35°C ΔT)	L/60'	1127
Continuous flow @ 45°C (35°C ΔT)	L/h	946
Peak 10 min flow @ 60°C (50°C ΔT)	L/10'	197
Peak 1st hour flow @ 60°C (50°C ΔT)	L/60'	749
Continuous flow @ 60°C (50°C ΔT)	L/h	662
Heat up time (Primary: 10-80°C)	mins	26

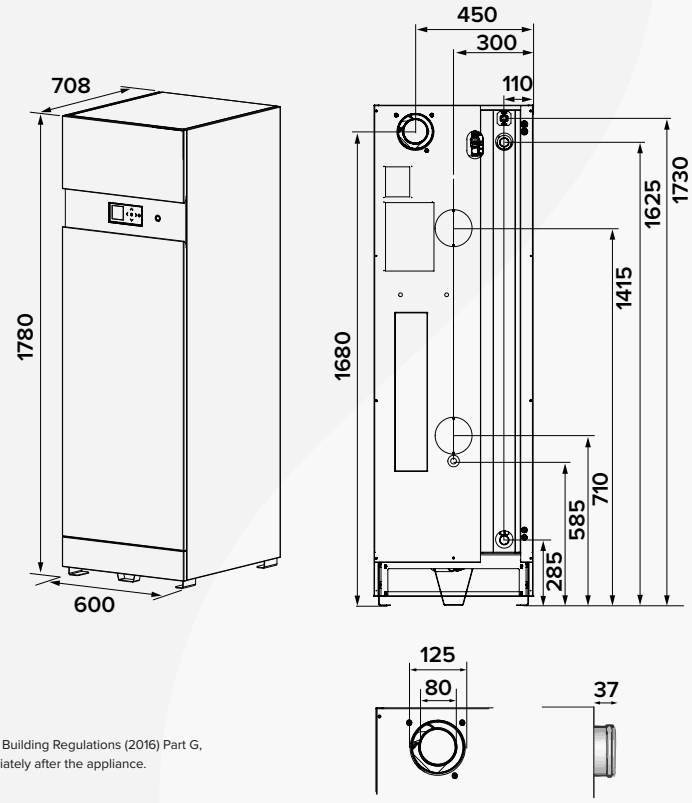

All dimensions in mm.

Minimum Clearances			
Top	Left side	Right side	Rear
200mm	600mm	250mm	400mm

This data assumes an incoming mains water temperature of 10°C. *In line with the recommendations specified in UK Building Regulations (2016) Part G, ACV UK Ltd advise the installation of a suitable domestic hot water thermostatic mixing valve on the hot flow immediately after the appliance.

Please contact ACV UK for details of flow rates and pressure drops at other system differentials.

Every effort has been taken to ensure the details are accurate. ACV UK Limited does not, however, guarantee the accuracy or completeness of any information nor does it accept liability for any errors or omissions in the information. ACV UK Limited reserves the right to make changes and improvements which may necessitate alteration to product specification without prior notice.