ACV
EXCELLENCE IN HOT WATER

EVO S

Gas condensing BOILER with modulating burner for natural gas and and propane gas

40, 60, 70, 80, 100, 120, 150 kW

INSTALLATION, USE AND MAINTENANCE INSTRUCTIONS

00U07428690-D_04-11-2024

For professional.
To be retained by the user for future reference.

EN

CONTENTS

1. WARNINGS AND RECOMMENDATIONS 5
1.1. Transport and storage 5
1.2. Symbols used in this document 5
1.3. Qualification of personnel for installation, adjustment, use and maintenance 5
1.4. Safety instructions 6
1.5. Water characteristics 8
1.6. Air quality 10

2. APPROVALS 11
2.1. Compliance with UK Directives 11
2.2. Regulatory installation conditions for other countries 11
2.3. Gas category 11
2.4. Gas supply pressures 12

3. TECHNICAL SPECIFICATIONS 14
3.1. Dimensions 14
3.2. Boiler components 16
3.3. Combustion at 15°C and 1013 mbar 19
3.4. Operating conditions 21
3.5. Electrical connection 21

4. INSTALLATION 22
4.1. Installing the boiler 22
4.2. Removing / installing the front panel 24
4.3. Flue connection 24
4.4. Gas connection 34
4.5. Changing gas (G20 to G31 for only 40 to 120 kW boilers) 35
4.6. Hydraulic connection and pump adjustment 39
4.7. Electrical connection 41

5. FIRST USE 46
5.1. Checks before first use 46
5.2. First use 46

6. CHECKS AFTER COMMISSIONING 47
6.1. Condensate removal 47
6.2. Gas supply 47

7. MAINTENANCE OPERATIONS 48
7.1. Draining the boiler 48
7.2. Annual checks 49

8. END OF PRODUCT LIFE 51

9. HYDRAULIC DIAGRAMS AND CONFIGURATIONS 52
9.1. Symbols used in the diagrams 52
9.2. List of diagrams 52

10. SPARE PARTS LIST 106

11. CUSTOMER REGULATION PARAMETERS TABLE 116

12. OPTION KITS 132
12.1.Boiler mounted kits 133
12.2.External kits 140

13. APPENDIX A.....147

14. INSTALLATION, COMMISSIONING & SERVICE RECORD LOG BOOK 148

1. WARNINGS AND RECOMMENDATIONS

PLEASE READ THIS MANUAL CAREFULLY BEFORE INSTALLING, MAINTAINING AND USING THE BOILER. IT CONTAINS IMPORTANT SAFETY INFORMATION.

1.1. Transport and storage

The boiler:

- must be stored vertically on a flat surface or in a place where the temperature is between -20°C and +55°C, and where the relative humidity is between 5% and 95%.
- must be- be sheltered.

1.2. Symbols used in this document

	INFORMATION:	This symbol draws attention to comments.
	IMPORTANT:	Not following these instructions may lead to damage when installing or to other objects.
	WARNING:	Not following these instructions may lead serious injury and property damage.
	WARNING:	Not following these instructions may lead electrocution.

1.3. Qualification of personnel for installation, adjustment, use and maintenance

The operations to install, adjust and maintain the boiler must be carried out by qualified and approved professionals in accordance with current local and national regulations (UK require Gas Safe Installer, IE require Registered Gas Installer RGII). These operations may require intervention under power, with the cover door (located on the front of the boiler) open.
The basic usage operations must be carried out with the casing doors closed.

This appliance can be used by children 8 years and above. Also persons with reduced physical, sensory or mental capabilities, or lack of experience and knowledge, provided they have been given supervision or instruction with the appliance. Cleaning and user maintenance shall not be made by children without supervision.

IMPORTANT:	**The installer must inform the user of the boiler's operation and its safety devices.** **They must also provide them with the user manual after the boiler has been installed.**

1.4. Safety instructions

Current Gas Safety (Installation and Use) Regulations or rules in force.

The appliance is suitable only for installation in GB and IE and should be installed in accordance with the rules in force.

In GB, the installation must be carried out by a suitably qualified Gas Safe registered engineer or in IE by a competent person. It must be carried out in accordance with the relevant requirements of the:

• Gas Safety (Installation and Use) Regulations

• The appropriate Building Regulations either The Building Regulations, The Building Regulations (Scotland), Building Regulations (Northern Ireland).

• The Water Fittings Regulations or Water byelaws in Scotland.

• The Current I.E.T. Wiring Regulations.

Where no specific instructions are given, reference should be made to the relevant British Standard Code of Practice.

In IE, the installation must be carried out by a Competent Person and installed in accordance with the current edition of I.S.813 “Domestic Gas Installations” or I.S. 820 “Non-Domestic Gas Installations” as appropriate, the current Building Regulations and reference should be made to the current ETCI rules for electrical installation.

The Boiler boilers have been tested and certified to;

BS EN 15502-1, BS EN 15502-2, BS EN 15502-2-1, BS EN 60335-1,

BS EN 60335-2-102, BS EN 55014-1 and BS EN 55014-2 for use with Natural Gas & Propane.

Detailed recommendations are contained in the following Codes of Practice:

BSEN 60529 IPX4D using test method: Figure 4 - Test device to verify protection against spraying and splashing water; second characteristic numerals 3 and 4 (oscillating tube).

BS. 6891 Installation of low pressure gas pipework of up to 28mm (R1) in domestic premises (2nd family gas).

BS. 5440 Inst. and maintenance of flues and ventilation for gas appliances of rated input not exceeding 70kW net (1st, 2nd and 3rd family gases).

Part 1 Specification for installation of flues.

Part 2 Specification for installation and maintenance of ventilation for gas appliances.

BS. 6644 : 2011 Installation of gas fired hot water boilers of rated inputs between 70kW and 1.8MW (net) (2nd and 3rd family gases).

BS. 6798 Installation and maintenance of gas fired hot water boilers of rated input not exceeding 70kW net.

BS. 6880 Low temperature hot water heating systems of output greater than 45kW.

Part 1 Fundamental and design considerations.

Part 2 Selection of equipment.

Part 3 Installation, commissioning and maintenance.

BSEN.12828:2012 Heating Systems in buildings: Design for water based systems.

BSEN.12831:2017 Heating Systems in buildings: Method for calculation of the design heat load.

BSEN.13831 Specification for: Expansion vessels using an internal diaphragm, for sealed hot water heating systems.

BSEN.14336:2004 Heating Systems in buildings: Installation and commissioning of water based heating systems.

IGEM/UP/1 Soundness testing and purging of industrial and commercial gas installation

IGEM/UP/2 Gas installation pipework, boosters and compressors on industrial and commercial premises.

IGEM/UP/10 Installation of gas appliances in industrial and commercial premises.

ICOM Water treatment and conditioning of commercial heating systems guide.

Where reference is made throughout these instructions I.S.813:2002 “Domestic Gas Installations” reference should also be made to I.S.820:2000 “Non-Domestic Gas Installations” as applicable.

WARNING:	**If you smell gas:** • **Do not use any naked flames, smoke or activate any contacts or electric switches.** • **Switch off the gas supply.** • **Ventilate the area.** • **Look for the leak and correct it.**
WARNING:	**If any smoke is released:** • **Switch off the boiler.** • **Ventilate the premises.** • **Look for the leak and correct it.**
WARNING:	**This boiler's earth continuity is provided by link cables (green/yellow) and specific fastenings. During any disassembly operations, make sure that the cables in question are reconnected; you MUST also reuse the original fastenings.**
WARNING:	**Presence of hot surfaces that can cause burns.**

1.5. Water characteristics

The following rules apply once the boiler is put into service and remain valid until the end of life of the product.

WARNING: **It is forbidden to use water containing glycol.**

1.5.1. Preparing the water system before putting the boiler into service

This is covered by ICOM (listed in Safety section).
Any installation must be thoroughly flushed and cleaned before it can be filled and used. ICOM's comprehensive guide deals with all aspects of water treatment for commercial heating systems.

1.5.2. Protecting the unit against scaling

Water naturally contains dissolved calcium ions and carbonates that cause scaling (calcium carbonate) to form. To prevent excessive deposits, take precautions with regard to the water used to fill the unit .
Water must be added during the life of the boiler. The new water adds scaling to the water system. The amount of fill water and the amount of make-up water added throughout the unit's lifecycle must not be more than three times the water capacity of the heating system. Also, the hardness of the make-up water must be controlled. Make-up water.
Adding a large amount of untreated water always contributes a significant amount of scaling. To monitor this and to detect problems, a system water meter must be installed. Failure to comply with these guidelines (such that the fill water plus the make-up water is more than three times the water capacity of the heating system) requires a full cleaning (to remove sludge and scaling) to be performed.

WATER TREATMENT CENTRAL HEATING

The range of boilers have a stainless steel heat exchanger.

IMPORTANT. use of non-recommended inhibitors may impact boiler warranty

ACV recommend Water Treatment in accordance with the Benchmark Guidance Notes on Water Treatment in Central Heating Systems.
If water treatment is used ACV recommend only the use of SCALEMASTER SM-1 PRO, FERNOX, MBI, ADEY MC1 or SENTINEL X100 inhibitors and associated water treatment products, which must be
used in accordance with the manufacturers' instructions.

Notes:

1. It is most important that the correct concentration of the water treatment products is maintained in accordance with the manufacturers' instructions.
2. If the boiler is installed in an existing system any unsuitable

additives MUST be removed by thorough cleansing. BS 7593 details the steps necessary to clean a domestic heating system.
3. In hard water areas, treatment to prevent limescale may be necessary - the use of artificially softened water is permitted when filling the system, where the cold supply is fitted with a water softening device.
4. Under no circumstances should the boiler be fired before the system has been thoroughly flushed.

1.5.3. Protecting steel and stainless steel boilers against corrosion

Corrosion can affect the iron components used in boilers and heating systems, which is directly related to the presence of oxygen in the water heater's water. Dissolved oxygen that enters the unit when it is being filled for the first time reacts with the equipment materials and quickly disappears. Without refreshing the oxygen through significant contributions of water, the unit might not experience any damage whatsoever.
However, it is important to follow the sizing rules and installation guidelines in order to prevent oxygen from continuously flowing into the heating water. From these rules, we have:

- Preferably an expansion vessel with a membrane rather than an open expansion vessel that allows direct passage.
- Internal pressure with the unit of more than 1 bar cold.
- Remove leaky (permeable) components that are letting out more gas than as if they were sealed.

If the guidelines above are followed, the unit's system water has the proper characteristics to last a long time: 8.2 < pH < 9.5 with a water concentration of < 0.1 mg/l.

If there is a chance that oxygen could enter the unit, you must take additional precautions. Adding an oxygen scavenger (ex. sodium sulphite) is highly recommended. We recommend directing any water treatment questions to specialists, which can provide:

- The appropriate treatment based on the characteristics of the unit,
- A monitoring agreement with a guarantee as to the results.

In the case of a unit where the water is in contact with heterogeneous materials, for example, if there is any copper or aluminium, appropriate treatment is recommended to guarantee a long lifetime for the unit. In most cases, this treatment involves adding chemical solution corrosion inhibitors to the installation. We recommend contacting water treatment specialists.

1.5.4. Unit monitoring

If the recommendations listed above (new installation or renovation) have been followed, the unit monitoring is limited to:

- Checking the amount of make-up water (fill water volume + make-up water volume < 3 times the unit volume).
- Checking the pH level (stable or slightly increasing).
- Checking the total hardness (stable or slightly decreasing).

We recommend monitoring these parameters two to three times a year. It should be noted that the "make up water quantity" parameter is vital for a long lifetime for the unit.
If any of these parameters deviates from the above recommendations, refer to a water treatment specialist to correct the problem.

1.5.5. Installation of the plate heat exchanger

It is recommended to use a form of hydraulic separation to protect the internal boiler components and extend the service life.

1.5.6. Setting up a filtration system

A filtration system on the back of the boiler is recommended in order to remove suspended particles from the unit (filter, sediment trap, etc.) .

1.6. Air quality

For boilers to operate correctly, the combustion air coming from outside must be free of dust. Significant corrosion can be caused by polluted air (containing chlorides for example) by products stored nearby (paint, cleaning products, solvents, glue, etc.). Combustion air must be free of halogen (chlorine, bromine, fluorine) and sea salt.

2. APPROVALS

2.1. Compliance with UK Directives

- Satisfies the essential requirements of the Electrical Equipment (Safety) Regulations 2016 and is manufactured in accordance with the UK designated standards.
- Satisfies the essential requirement of the Electromagnetic Compatibility Regulations 2016 and is manufactured in accordance with the UK designated standards.
- Satisfies the essential requirements of the regulation 2016/426 on gas appliances as bought into UK law and amended and is manufactured in accordance with the UK designated standards.
- - Satisfies the essential requirements of the Directive 92/42/EEC on efficiency requirements for new hot-water boilers fired with liquid or gaseous fuels as amended by The Ecodesign for Energy-Related Products and Energy Information (Amendment) (EU Exit) Regulations 2019 and is manufactured in accordance with the UK designated standards.

2.2. Regulatory installation conditions for other countries

See earlier reference to Gas Safe etc..

The appliance must be installed and maintained by a qualified professional, in accordance with the regulations and current regulatory practices in the country where the boiler is installed.

2.3. Gas category

This boiler has been adjusted in the factory to work with **group H (type G20) natural gas with a supply pressure of 20 mbar**.
See chapter 4.5 for how to change the gas, and use a qualified professional.

INFORMATION: **Any work on a sealed component will lead to loss of the guarantee.**

Models	Gas category	
	UK	IE
40 to 120	II_{2H3P}	II_{2H3P}
150	I_{2H}	I_{2H}

INFORMATION: **This boiler is compatible for operation with natural gas (G20) containing up to 20% hydrogen gas (H_2)**

2.4. Gas supply pressures

INFORMATION: **The pressures provided below must be taken at the input to the gas valve.**

	Natural gas H G20	Propane gas G31
Nominal pressure (mbar)	20	37
Minimum pressure (mbar)	17	25
Maximum pressure (mbar)	25	45

INFORMATION: **This boiler is compatible for operation with natural gas (G20) containing up to 20% hydrogen gas (H_2)**

3. TECHNICAL SPECIFICATIONS

3.1. Dimensions

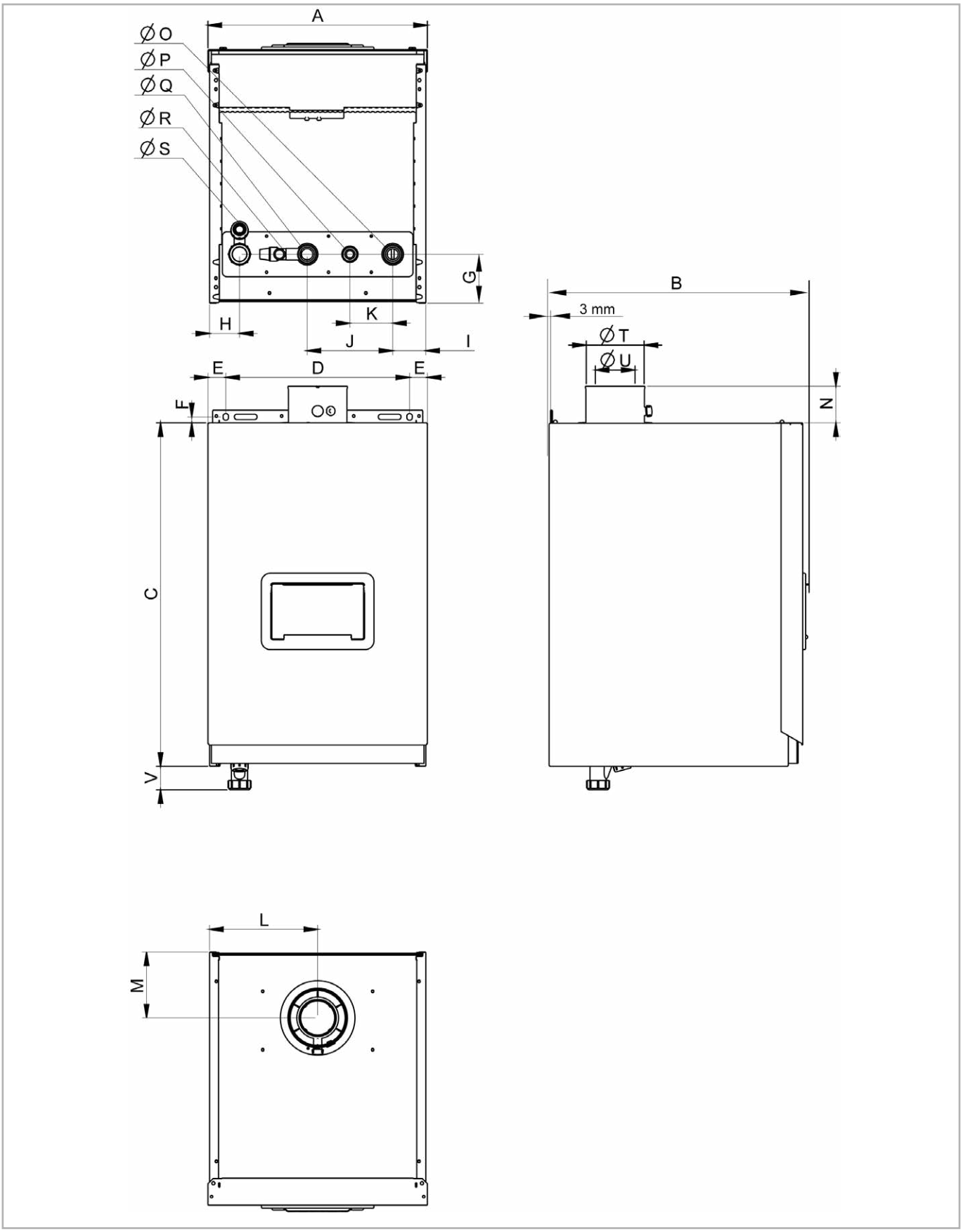

Figure 1 - Dimensional characteristics

			MODELS in kW						
			40	60	70	80	100	120	150
A	Boiler width	(mm)	487						
B	Boiler depth	(mm)	577			668			
C	Boiler height	(mm)	764			895			
D	Fixing centers	(mm)	408						
E	Distance of fixings to side of boiler	(mm)	36						
F	Fixing point centers above top of casing	(mm)	17						
G	Center of connections to rear of boiler	(mm)	108.5						
H	Center of siphon outlet to side casing		66.5			65.5			
I	Center of return connection from casing side	(mm)	73.5			74.5			
J	Centers between flow and return connections	(mm)	190						
K	Centers between gas inlet and return connection	(mm)	95						
L	Center of flue from side	(mm)	240						
M	Center of flue from rear	(mm)	146.5			123			
N	Flue connection socket height	(mm)	83						
Ø O	Return connection		G 1"1/4						
Ø P	Gas inlet connection		G 1"						
Ø Q	Flow connection		G 1"1/4						
Ø R	Pressure relief valve		G 1/2" (female)						
Ø S	Condensate outlet	(mm)	24						
Ø T	Air inlet	(mm)	125			150			
Ø U	Flue duct	(mm)	80			100			
V	Siphon outlet from the bottom of the casing	(mm)	52						

3.2. Boiler components

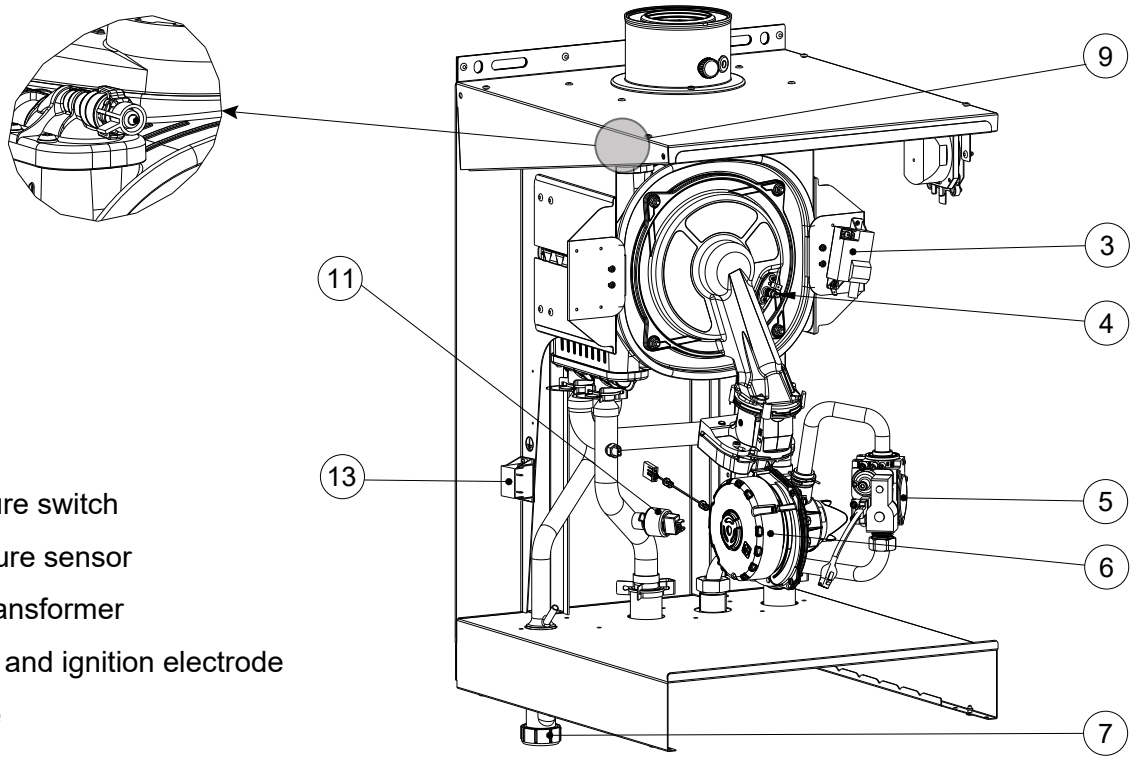

view without NAVISTEM B3100 unit

1 Air pressure switch
2 Température sensor
3 Ignition transformer
4 Ionization and ignition electrode
5 Gas valve
6 Fan
7 Condensate siphon (supplied unmounted)
8 Water return temperature sensor
9 Bleed valve
10 Water outlet temperature sensor
11 Water pressure sensor
12 Water flow meter
13 EMC filter (on 55 kW)

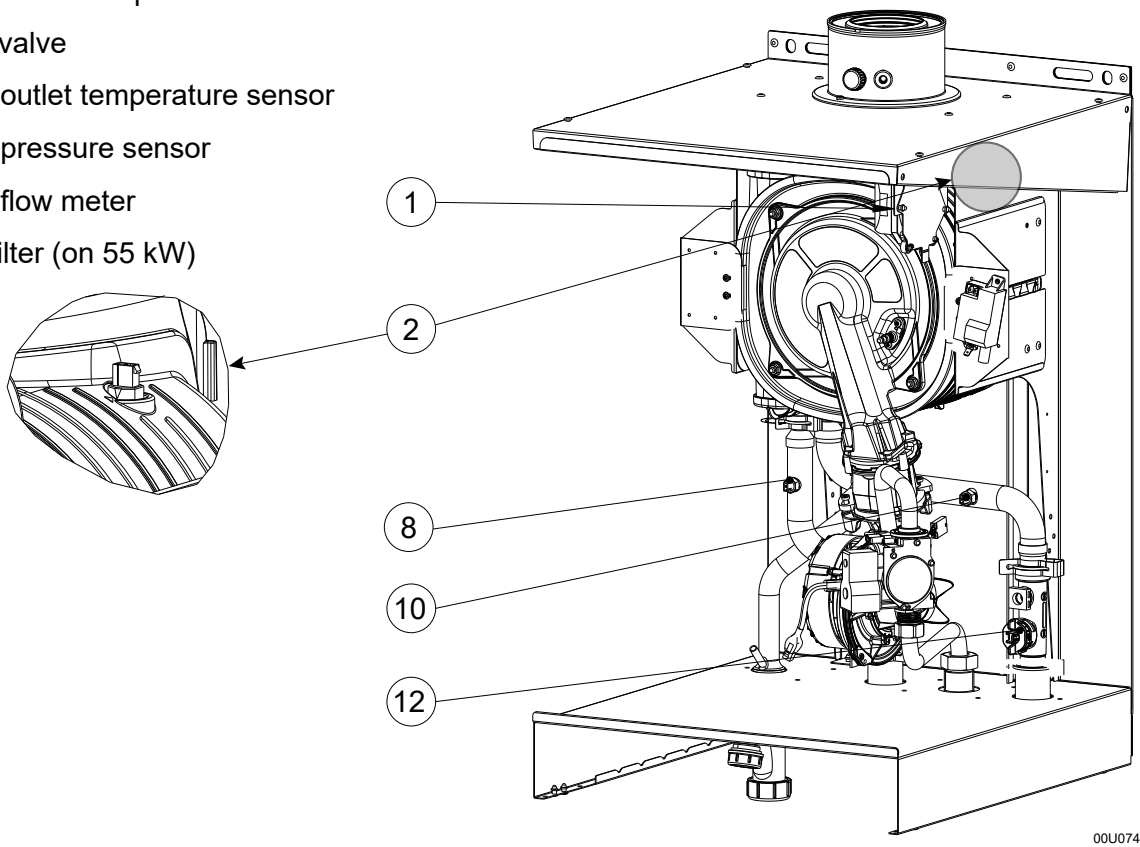

00U07452020-B

Figure 2 - Boiler components for 40 to 70 models

Note: *in order to facilitate viewing, the side covers have been removed, but these cannot be removed*

1 Air pressure switch
2 Temperature sensor
3 Ignition transformer
4 Ignition electrode
5 gas valve
6 Fan
7 Condensate siphon (supplied unmounted)
8 EMC filter
9 Water return temperature sensor
10 Trap
11 Water outlet temperature sensor
12 Ionization electrode
13 Pressure sensor
14 Flowmeter

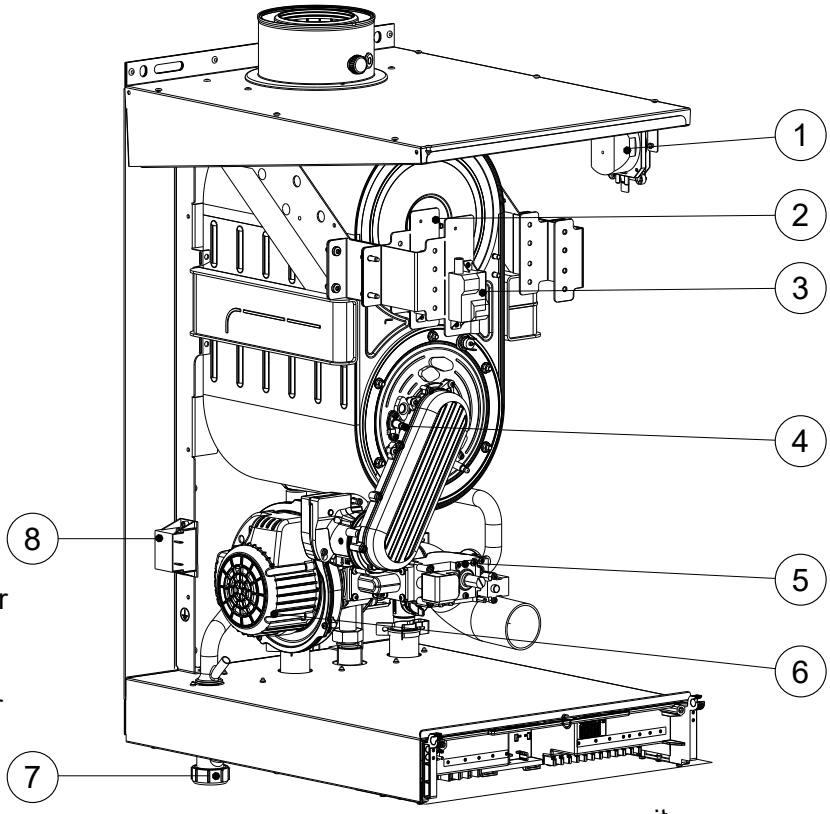

view without NAVISTEM B3100 unit

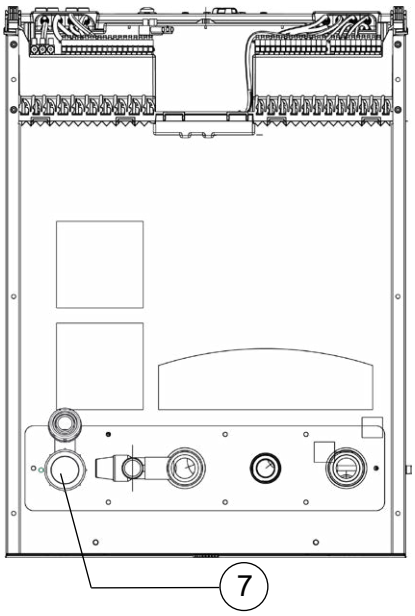

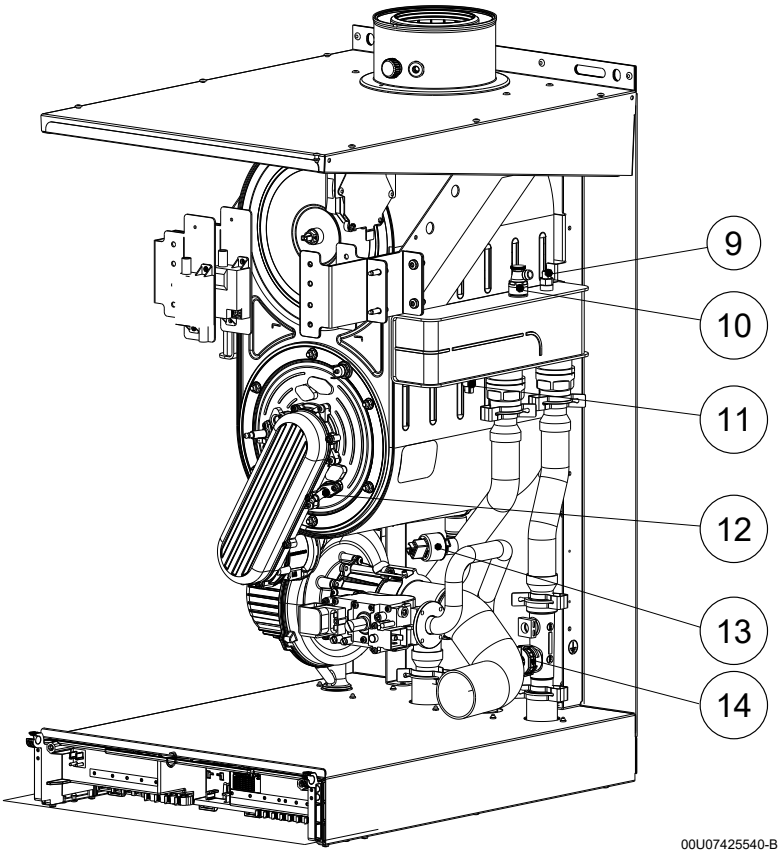

Figure 3 - Boiler components for 80 to 120 models

Note: *in order to facilitate viewing, the side covers have been removed, but these cannot be removed*

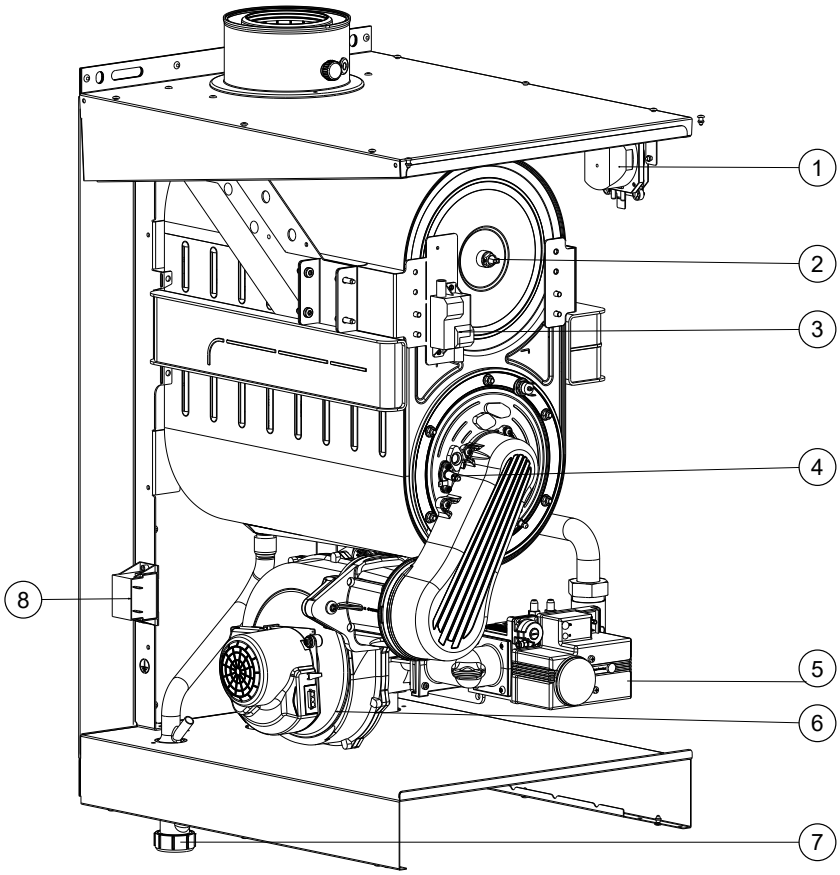

1 Air pressure switch
2 Flue gas temperature probe
3 Ignition transformer
4 Ignition electrode
5 Gas valve
6 Fan
7 Condensate siphon (supplied unmounted)
8 EMC filter
9 Water return temperature sensor
10 Bleed valve
11 Water outlet temperature sensor
12 Ionization electrode
13 Water pressure sensor
14 Water flow meter

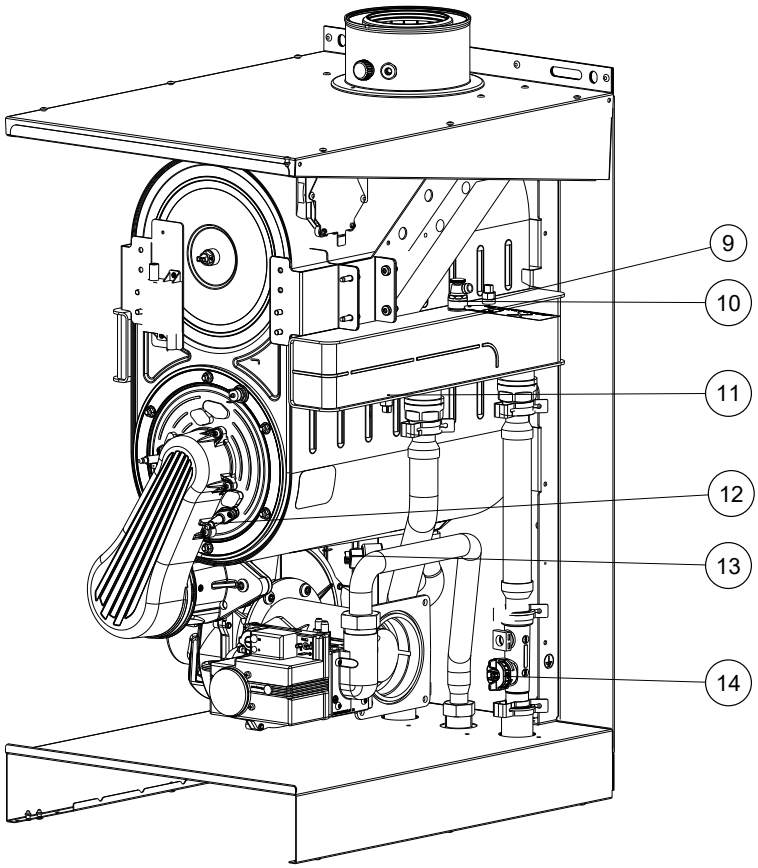

00U07443850-B

Figure 4 - Boiler components for 150 model

Note: *in order to facilitate viewing, the side covers have been removed, but these cannot be removed*

3.3. Combustion at 15°C and 1013 mbar

3.3.1. G20 natural gas

			MODELS in kW						
			40	60	70	80	100	120	150
Nominal power Pn (80/60°C)		kW	38.8	53.4	67.8	77.8	93.4	116.8	141.1
Nominal power when condensing P (50/30°C)		kW	42.2	58.0	73.6	84.4	101.3	127.8	154.5
Minimum power Pmin (80/60°C)		kW	7.8	10.7	13.6	18.7	18.7	23.4	28.2
Rated heat input Qn		kW	40.0	55.0	69.9	80.0	96.0	120.0	145.0
Heat release rate upon ignition Qall		kW	8.5	16.5	20.0	20.2	20.2	26.4	30.5[1]
Min heat input Qmin		kW	8.0	11.0	14.0	19.2	19.2	24.0	29.0
Performance Pn (80/60°C)		%	97.2	97.2	97.1	97.4	97.4	97.4	97.4
Performance Pn (50/3°C)		%	105.8	105.6	105.5	105.6	105.6	106.6	106.6
Performance 30% (Return 30 °C)		%	108.4	108.2	108.3	108.3	108.3	108.3	108.6
Gas flow rate at Pn (15 °C)		m^3/h	4.2	5.8	7.4	8.5	10.2	12.7	15.3
Value range of CO_2 (%)	at Qmin/	min/max	9.6 / 10			8.8 / 9.2		8.9 / 9.3	
	at Qmax	min/max	8.8 / 9.2						
Value range of O_2 (%)	at Qmin/	%	$3.1<O_2<3.8$			$4.5<O_2<5.2$		$4.3<O_2<5.0$	
	at Qmax	%	$4.5<O_2<5.2$						
Exhaust outlet interior diameter		mm	80	80	80	100	100	100	100
Exhaust mass flow rate (80/60°C)	Qn	g/s	18.6	25.6	32.5	37.2	44.7	55.8	67.5
	Qmin		4.0	7.7	9.3	9.4	9.4	12.3	14.2
Exhaust mass flow rate (50/30°C)	Qn	g/s	16.8	23.1	29.3	33.6	40.3	50.3	60.8
	Qmin		3.6	6.9	8.4	8.5	8.5	11.1	12.8
Exhaust temperature (80/60°C)	Qn	°C	79.0	75.5	74.5	66.5	72.5	73.5	73.0
	Qmin		66.5	62.5	61.5	56.5	56.5	58.5	59.0
Exhaust temperature (50/30°C)	Qn	°C	55	57	54	51	56	54	58
	Qmin		46	41	38	31	31	37	32
Maximum allowable nozzle pressure (B23P) (80/60°C)	Qn	Pa	150	170	185	120	165	190	190
	Qmin		40	40	40	40	40	40	40
Maximum allowable nozzle pressure (B23P) (50/30°C)	Qn	Pa	126	145	145	153	153	157	170
	Qmin		40	40	40	40	40	40	40
Combustion air flow rate at Qn (15 °C)		m^3/h	51.3	70.5	89.6	102.5	123.0	153.8	185.8
Max CO at Qn		ppm	125	135	125	115	135	155	140
NOx class			6						
Smoke removal and air inlet type classifications			B23, B23P, C13, C33						

[1]: 43.5 in C13/C33

INFORMATION: **Compared to pure natural gas (G20), a reduction in heat flow of up to 7% is possible for a hydrogen (H_2) content of up to 20% in the gas mixture.**

3.3.2. G31 Propane Gas (for relevant models and destination countries)

			MODELS in kW					
			40	60	70	80	100	120
Nominal power Pn (80/60°C)		kW	38.8	53.4	67.8	77.8	93.4	116.8
Nominal power when condensing P (50/30°C)		kW	42.3	58.1	73.7	84.5	101.4	127.9
Minimum power Pmin		kW	7.8	10.7	13.6	18.7	18.7	23.4
Rated heat input Qn		kW	40.0	55.0	69.9	80.0	96.0	120.0
Heat release rate upon ignition Qall		kW	17.0	20.0	21.0	20.2	20.2	31.2
Min heat input Qmin		kW	8.0	11.0	14.0	19.2	19.2	24.0
Gas flow rate at Pn (15 °C)		m^3/h	1.64	2.25	2.86	3.27	3.93	4.91
Value range of CO_2 (%)	at Qmin	min/max	10.8 / 11.2			10.2 / 10.6		9.8 / 10.2
	at Qmax	min/max	10.3 / 10.7			9.8 / 10.2		
Exhaust outlet interior diameter		mm	80	80	80	100	100	100
Exhaust mass flow rate (80/60°C)	Qn Qall Qmin	g/s	17.8 3.6	24.5 4.9	31.2 6.2	35.7 8.6	42.8 8.6	53.5 10.7
Exhaust mass flow rate (50/30°C)	Qn Qall Qmin	g/s	18.9 3.8	25.9 5.2	32.9 6.6	37.7 9.0	45.2 9.0	57.1 11.4
Exhaust temperature (80/60°C)	Qn Qall Qmin	°C	76 62	76 62	74 62	67 56	73 56	74 58
Exhaust temperature (50/30°C)	Qn Qall Qmin	°C	56.4 44.2	57.6 39.0	52.8 35.5	52.9 30.5	53.4 31.0	53.0 31.0
Maximum allowable nozzle pressure (B23P) (80/60°C)	Qn Qall Qmin	Pa	145 40	175 40	175 40	120 40	165 40	190 40
Maximum allowable nozzle pressure (B23P) (50/30°C)	Qn Qall Qmin	Pa	125 40	155 40	155 40	100 40	145 40	170 40
Combustion air flow rate at Qn * (15 °C)		m^3/h	49.9	68.6	87.1	104.4	125.3	156.6
NOx class			6					
Smoke removal and air inlet type classifications			B23, B23P, C13, C33					

3.4. Operating conditions

		MODELS in kW						
		40	60	70	80	100	120	150
Installation premises (Min / max)		5 / 45°C						
Installation premises relative humidity (Min / max)	%	between 5 and 95%						
Max flow temperature setting	°C	85.0						
Minimum flow temperature setpoint	°C	8.0						
Maximum flow temperature	°C	92.0						
Maximum safe temperature	°C	110.0						
Max service pressure	hPa (bar)	4000 4			6000 6			
Min cold pressure	hPa (bar)	1000 1						
Nominal water flow rate (Pnom/20)	m^3/h	1.72	2.36	3.00	3.44	4.30	5.16	6.23
Minimum water flow rate	m^3/h	0.57	1.15		2.30		3.00	3.44
Water content	L	3	4	4.5	7.5		9.5	11
Weight without water	kg	45	51	55	77		81	100
Protection level		IP24D						
Maximum installation altitude	m	2000						

3.5. Electrical connection

		MODELS in kW						
		40	60	70	80	100	120	150
Power supply	V	230V AC (+10%, -15%), 50 Hz						
Electrical power consumed at Pn (excluding accessories)	W	67	107	121	94	143	233	260
Electrical power consumed at 30% of Pn (excluding accessories)	W	46	77	29	51	57	49	98
Electrical power consumed at Pn with ACV-supplied boiler circulator (excluding accessories)	W	100.0	171.0	220.0	178.0	251.0	365.0	550.0
Electrical power consumption in standby mode	W	4.0					3.0	
Maximum length of sensor cables	m	DHW sensor: 10 Outdoor sensor: 40 in 0.5 mm² (120 in 1.5 mm²) Room thermostat: 200 in 1.5 mm² Room sensor: 200 in 1.5 mm²						
Terminal output power	V A	230V AC (+10%, -15%) 5mA to 1A						

4. INSTALLATION

The boiler is delivered with:
- A plan for helping fix the boiler to the wall.
- Two mounting hooks.
- A 4 bar safety valve (models less than or equal to 70 kW) or 6 bar (models greater than or equal to 80 kW).- A plastic funnel that is adapted to the safety valve.
- A plastic funnel that is adapted to the safety valve.
- A siphon and a flexible hose for evacuating condensates.
- An information plate for the 40 to 120 kW models switching to propane gas.
- A gas adapter for the 80 to 120 kW models switching to propane gas.

IMPORTANT: **The boiler must not bear the weight of the accessories and connections (hydraulics, gas, exhaust system, etc.).**

4.1. Installing the boiler

WARNING : **The use of the fixing hooks supplied with the product or our supports is mandatory.**

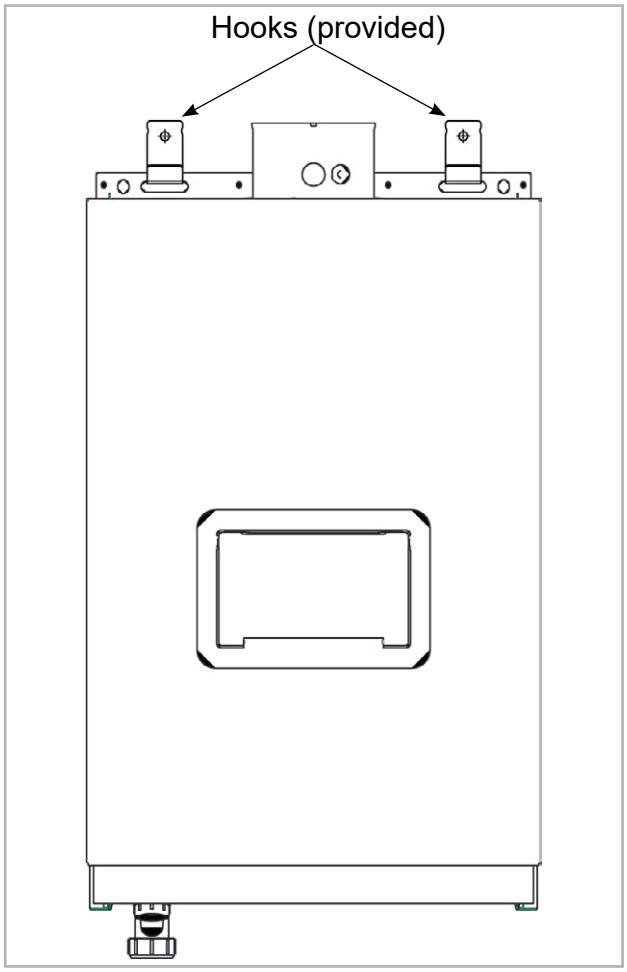

Figure 5 - Mounting with hooks (supplied)

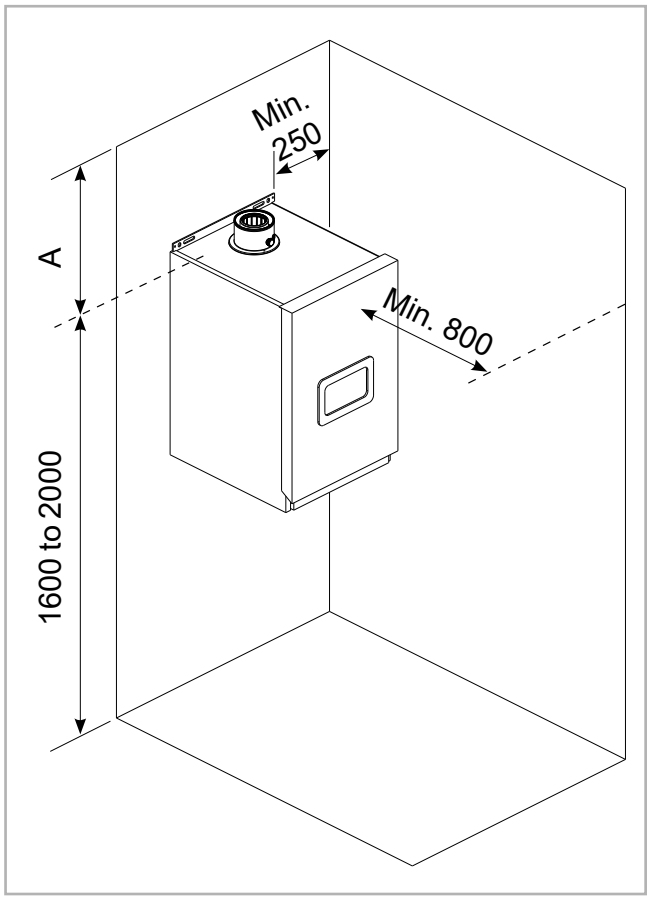

Figure 6 - Clearances

EVO S boilers must not be mounted on a wall covered with an inflammable material: plastic, wood, etc.

The combustion air must be free of agents containing chlorine, ammonia, fluorine and alkaline. These compounds are found in aerosols, paints, cleaning products, washing powder, detergents, glue, snow-clearing salt, etc.
Do not draw in the air that is evacuated from places where these products are used - swimming pools, laundries, hair dressing salons, cold rooms - as one or more of these compounds could be introduced into the combustion air.

Recommended distances relative to walls:
Sufficient clearances must be provided to permit easy maintenance operations on the boilers. The **minimum** values (in mm) are indicated in the diagram opposite and the following table.

These values cannot be substituted for the specific regulatory requirements.

	B23 / B23P						C13		C33	
	40 to 70			80 to 150			40 to 70	80 to 150	40 to 70	80 to 150
	ø80	ø100	ø130	ø100	ø130	ø150	ø80/125	ø100/150	ø80/125	ø100/150
A* (mm)	393	450	530	289	416	426	290	325	145	145

* The minimum dimension of A corresponds to the spare required to install the exhaust system accessories. It takes account of the dimensions of the 87° angle of a horizontal duct, independently of the length and gradient of the latter.

IMPORTANT: **The boiler must be positioned level (figure 5) using a spirit level to promote effective degassing of the body exchanger (use the roof as a reference surface).**

IMPORTANT: **Do not use the front plastic panel to lift and move the boiler.**

4.2. Removing / installing the front panel

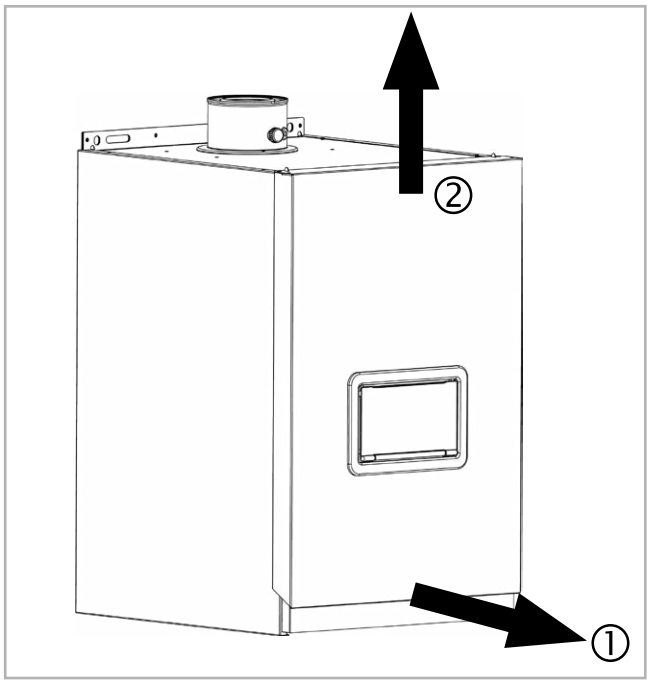

Figure 7 - Removing the front cover

① Pull the bottom of the panel forwards to release.

② Lift the front panel to remove it and free the 2 lugs.

Perform the operation in reverse to reassemble.

4.3. Flue connection

Covered by Gas Safe reference.
You must comply with the regulatory texts and rules of the art that apply in the country where the boiler will be installed, i.e.:

The exhaust evacuation ducts must be made of a material that is resistant to the condensates that can form during the boiler's operation, and their correct fit must be checked. These materials must also be capable of supporting flue gas temperatures up to 120°C.
Do not use non-compliant, modified, or broken ducts.
One exhaust temperature sensor guarantees the protection of the type B and C combustion product evacuation ducts.

EVO S boilers are approved to be connected to:

- a B23 or B23P open flue
- a C13 or C33 room seuled flues

IMPORTANT: **The boiler must not be made to support the exhaust duct's weight.**

4.3.1. Ventilation

BOILERS NOT EXCEEDING 70kW

The ventilation requirements of these boilers is dependent on the type of flue system used, and their heat input. All vents must be permanent with no means of closing and positioned to avoid accidental obstruction by blocking or flooding.

Detail reference should be made to BS. 5440 Pt. 2. In IE refer to the current edition of I.S. 813.

The following notes are for general guidance only: If installed as a room sealed appliance in a room or internal space, then no purpose provided ventilation is required.

If installed as an open flued appliance in a room or internal space, then a permanent air vent is required. The sizes given below are for vents directly communicating with outside air. For other situations refer to BS. 5440 Pt. 2. In IE refer to the current edition of I.S. 813

Ventilation Requirements (not exceeding 70kW net Input) when installed in a compartment.

If installed in a compartment, then permanent air vents are required at high and low level. These vents may communicate direct to outside air, or to a room/internal space. If to a room/internal space, it must itself be adequately ventilated as above.

Room sealed application – min. vent free area (cm²)					Open flue application – min. vent free area (cm²)			
	To a room or internal space		To outside air		To a room or internal space		To outside air	
Boiler size	40	60	40	60	40	60	40	60
High level	410	610	205	305	410	610	205	305
Low level	410	610	205	305	820	1220	410	610

BOILERS 70kW and over

Detail reference should be made to BS. 6644 and IGEM/UP/10 for inputs between 70kW and 1.8MW (net). In IE refer to the current edition of I.S.820. The following notes are for general guidance only:

If ventilation is to be provided by means of permanent high and low vents communicating direct with outside air, then reference can be made to the sizes below. For other ventilation options refer to BS. 6644 and IGEM/UP/10. In IE refer to the current edition of I.S.820.

Open Flued Installations

Required area (cm²) per kW of total rated input (net)

Note: Where a boiler installation is to operate in summer months (e.g.DHW) additional ventilation

	Boiler room	Enclosure
Low level (inlet)	4	10
Hight level (outlet)	2	5

requirements are stated, if operating formore than 50% of time (refer to BS6644) and IGEM/UP/10.

Room Sealed Installations

A minimum of 2cm2 free area per kW of net heat input at both high and low level is required for boiler rooms. For enclosures refer to BS6644 and IGEM/UP/10.

The temperature within the boiler room shall not exceed 25ºC within 100mm of the floor, 32ºC at mid height and 40ºC within 100mm of the ceiling.

4.3.2. Connection to a B23 chimney

B23 type connection:
Air from the installation premises, gas evacuation through the roof via a natural draft pipe.

IMPORTANT: **Check that the boiler installation premises have high and low ventilation, that it conforms to current regulations and that it is not obstructed.**

For the **EVO S 40-70**, the use of the Ø130 Chimney Adaptor accessory (code 040940) is mandatory to connect the boiler to a B23 chimney duct. This kit is suitable for Ø130 external ducts.

For the **EVO S 80-150**, the use of the Ø150 Chimney Adaptor accessory (code 041050) is mandatory to connect the boiler to a B23 chimney duct. This kit is suitable for Ø 150 external ducts.

IMPORTANT: **Under no circumstances is use of these mandatory accessories a substitute for checking the dimensioning of the chimney ducts (given a combustion gas pressure at the boiler outlet equal to 0 Pa).**

EVO S boilers are high performance boilers with very low exhaust temperatures; consequently to retain a favourable draft the ducts must run upwards from the boiler outlet.
Horizontal duct runs must be avoided so as to limit condensate retention. To do this use a minimum slope of 3 % (30 mm for each 1m length) towards the boiler in the horizontal parts.

WARNING: **If several boilers are connected to one flue, check by calculation that the flue is not pressurised when all the boilers are operating at Qn.**

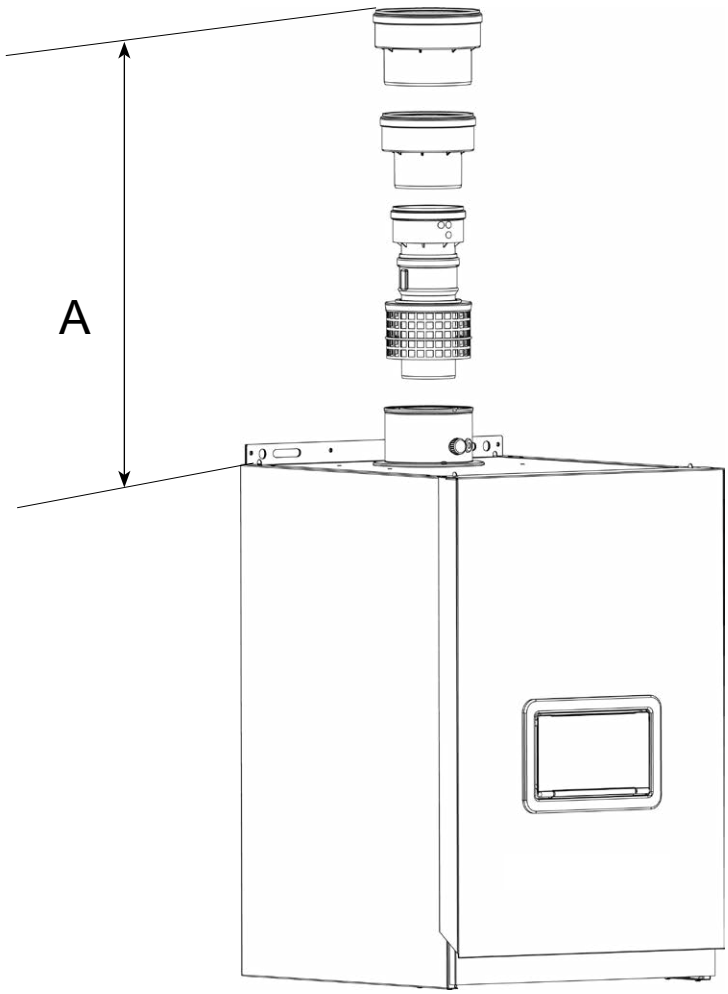

The A dimension indicates the height of the chimney adapter when fully inserted relative to the upper panel of the boiler.

Figure 8 - Dimensioning recommendations

4.3.3. Connection to a B23P chimney

B23P type connection:
Air from the installation premises, gas evacuation through the roof via a pressurised duct.

IMPORTANT:	**Check that the boiler installation premises have high and low ventilation, that it conforms to current regulations and that it is not obstructed.**

IMPORTANT:	**The use of the "Chimney Adaptor" accessory is mandatory to connect a EVO S boiler to a B23P chimney duct. The table below shows the accessories available for each boiler type.**

IMPORTANT:	**The combustion product extraction duct must be dimensioned by using the parameters set out in the table in chapter 3.3.** **Depending on the actual configuration of the duct, a calculation is required to check that the pressures at the boiler outlet at Qmin, Qall and Qn do not exceed the maximum allowable values in this table.** **Values corresponding to the 50/30°C regime are to be used for this calculation.**

IMPORTANT:	**If several boilers are connected to the same flue, check the following by calculation:** • **<u>One boiler at Qmin and the others at Qmax:</u>: The outlet pressure of the boiler at Qmin must be lower than the permissible pressure specified in the table in Chapter 3.3.** • **<u>One boiler at Qall and the others at Qmax:</u>: The outlet pressure of the boiler at Qall must be lower than the permissible pressure specified in the table in Chapter 3.3.** • **<u>All the boilers at Qmax:</u>: The outlet pressure of the four boilers must be lower than the permissible pressure specified in the table in Chapter 3.3.**

Kits include adaptators where kit is larger than duct size (see drawing)

The 80 Chimney Adaptor accessory has an Ø80, 500 mm long straight component that can be cut to the desired dimension **(195 mm min)**.
The Ø 100 chimney adapter have an outlet that cannot be cut.
A purge tee is not necessary, because condensate recovery is incorporated in the boiler. To do this use a minimum slope of 3 % towards the boiler in the horizontal parts.
To ease fitting coat the joints with water.

4.3.4. Assembling the flue

Flue terminals or extension ducts may be cut to shorter lengths if required When cutting a duct ensure it is square by marking the length all the way around and only cut back the plain end.
When cutting concentric duct, it is important that the inner duct is maintained at 20mm longer than the outer duct to allow correct connection of the ducts. Care should be taken to support the inner duct when cutting the flue. When assembling only use water as a lubricant.

Note. Horizontal flue runs must be angled down between1.5° - 3° towards the water heater to allow the condensate to drain. For this reason, it is recommended that a support bracket is used for every 1m of extension pipe.

See below for flue assembly examples.

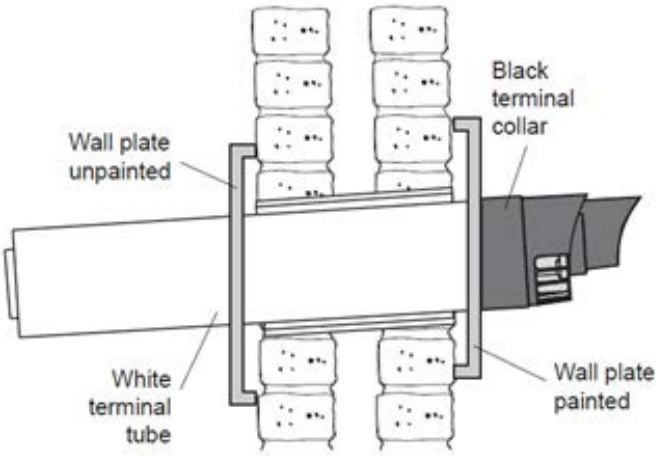

Cut the white terminal tube to the correct length and ensure the painted wall plate is pushed hard up to the black terminal collar when fitted.

IMPORTANT: **There should be NO white terminal tube visible when viewed from the outside.**

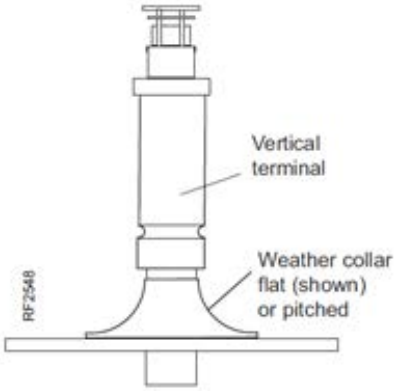

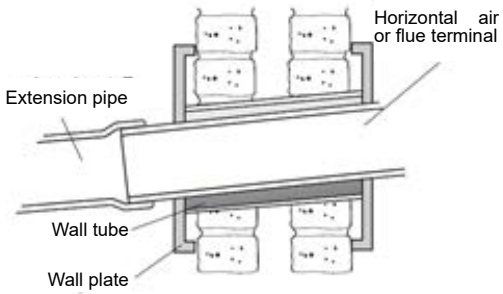

4.3.5. FLUE TERMINATION POSITION

IMPORTANT INFORMATION

Install the flue in accordance to BS 5440:1 2008 Position the terminal, so the products of combustion do not cause a nuisance. The flue is secured in the wall using either sand and cement or heatproof silicone. The flue must be supported by a bracket every meter of flue length and at every change of direction.

Due to the high efficiency pluming will occur. For this reason, vertical termination is recommended, and in any case, terminal positions which could cause problems should wherever possible be avoided.

Care should be taken in the case of large multiple boiler installations and complying with the requirements of the Clean Air Act. The information below is extracted from BS. 5440 Pt. 1 and is for boilers with heat inputs not exceeding 70kW nett, and the latest Building Regulation Part J. Detailed reference should still be made to these standards. In IE refer to I.S. 813:2002.

Table 1 - Flue Terminal Position

Flue Terminal Positions	Min. Spacing*
1. Directly below, above or alongside an opening.	300 mm
2. Below guttering, drain pipes or soil pipes.	75 mm ~~25 mm*~~
3. Below eaves.	200 mm ~~25 mm*~~
4. Below balconies or a car port roof.	200 mm ~~25 mm*~~
5. From vertical drain pipes or soil pipes.	150 mm ~~25 mm*~~
6. From an internal or external corner or a boundary alongside the terminal.	300 mm ~~25 mm*~~
7. Above adjacent ground, roof or balcony level.	300 mm
8. From a surface or a boundary facing the terminal.	600 mm
9. From a terminal facing a terminal.	1200 mm
10. From an opening in a car port into dwelling.	1200 mm
11. Vertically from a terminal on the same wall.	1500 mm
12. Horizontally from a terminal wall.	300 mm
13. Horizontally from an adjacent window	600 mm
14. Facing an opening into an adjacent building	2000 mm
15. At an angle to the boundary 90°	300 mm
45°	600 mm
16. Parallel to a boundary	300 mm
17. Below ground level – open light well	
a) Below ground	<1,000 mm
b) Above floor level	300 mm
c) From side	300 mm
d) From facing surface	600 mm

(1) In addition, for temperature and structural reasons, the terminal should not be nearer than 150 mm (fanned draught) to an opening in the building fabric formed for the purpose of accommodating a built-in element such as a window frame.

(2) Where the lowest part of the terminal is fitted less than 2m above a balcony, above ground or above a flat roof to which people have access then the terminal MUST be protected by a purpose designed guard

4.3.5.1. Horizontal flue positions

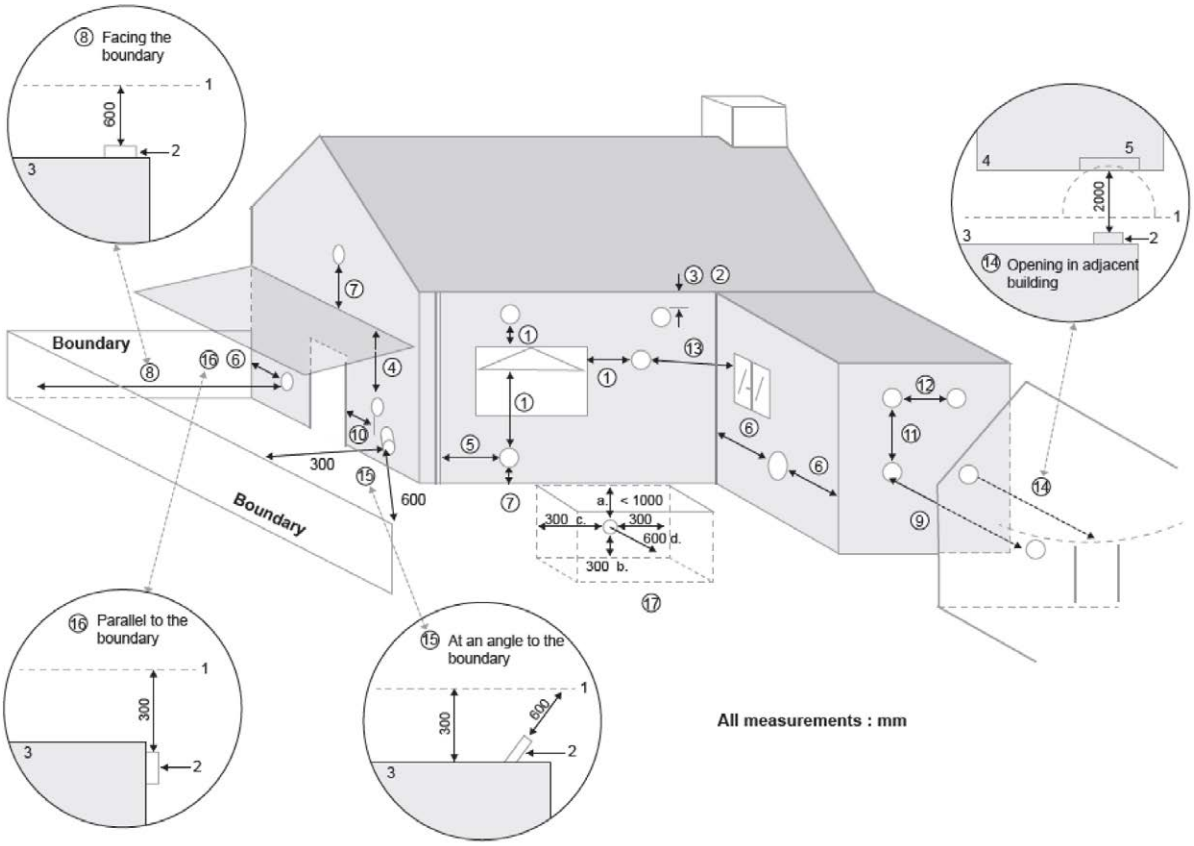

Refer to table 1

4.3.5.2. VERTICAL FLUE POSITIONS

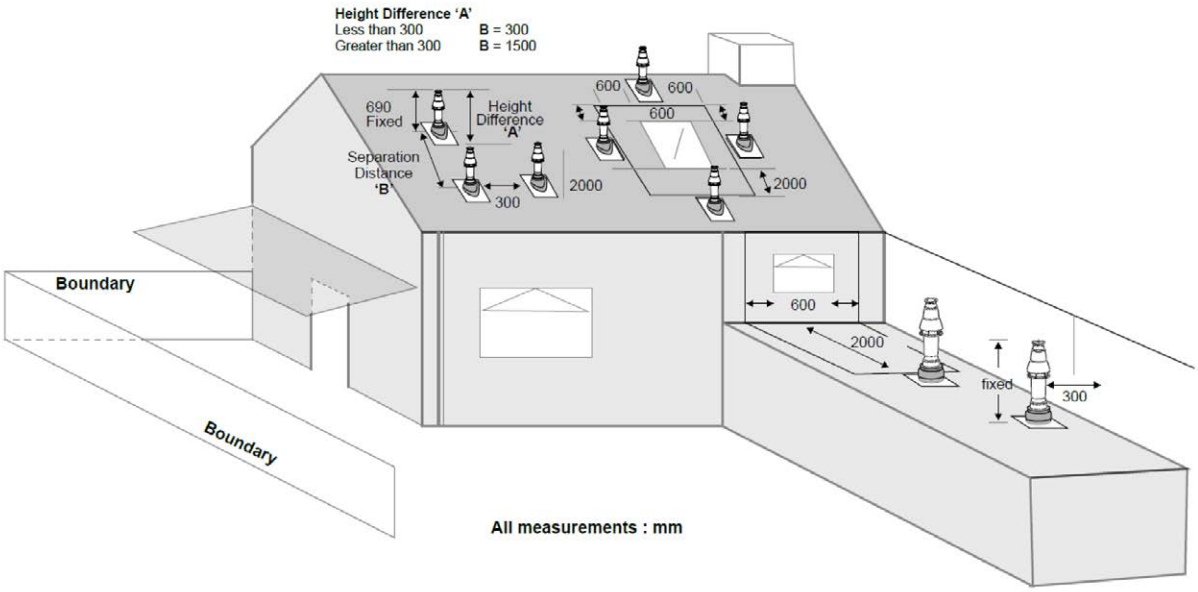

Refer to table 1

HEAT INPUTS IN EXCESS OF 70kW NETT

For boiler installations with total heat inputs in excess of 70kW nett, reference should be made to BS6644 and IGEM/UP/10. In IE refer to I.S.820.2000.

4.3.6. Connection to a C13 or C33 suction pipe

C13 type connection:
Air inlet and gas evacuation through concentric ducts connected to a horizontal concentric terminal (suction pipe).

C33 type connection:
Air inlet and gas evacuation through concentric ducts connected to a vertical concentric terminal.

WARNING:

The use of the "Horizontal suction pipe" accessory is mandatory to connect the boiler to a C13 concentric suction pipe.
The use of the "Vertical black suction pipe" or "Vertical ochre suction pipe" accessory is mandatory to connect the boiler to a C33 concentric suction pipe.
Approved conduits are M&G Skyline conduits and terminals may also be used.

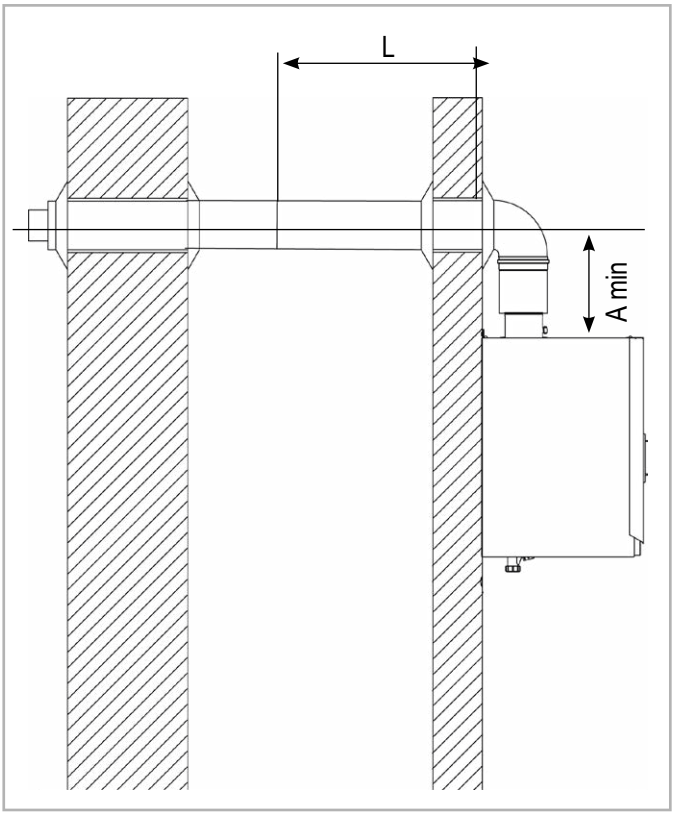

Figure 9 - C13 type connection

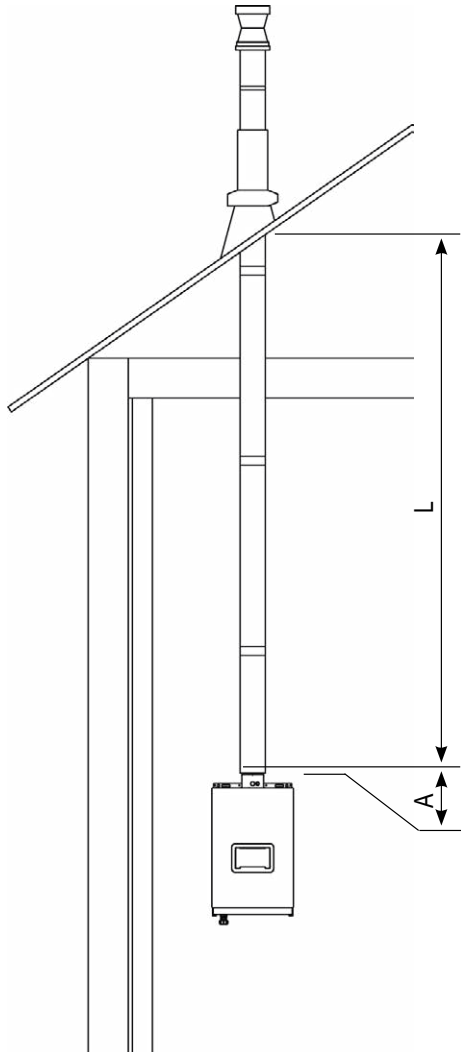

A indicates the upper position of the boiler gas outlet.

Figure 10 - C33 type connection

WARNING:

The ignition speed MUST be modified on the 150 kW boilers.
Place the boiler in standby mode (see § 3.3.1 of the NAVISTEM B3100 boiler command table instructions).

If necessary, press the ESC button to return to the main screen.

Open the ***Safety unit*** menu.

Adjust the ignition speed parameter (9512):

Connection type	9512 (rpm)
B23 / B23P	1650
C13 / C33	2140

The table below shows the available accessories according to the type of boiler, the diameters of the ducts and the maximum rectilinear lengths.

			EVO S						
			40	60	70	80	100	120	150
Suction pipe horizontal type C13	Terminal C13		--			--			
	Ø duct		Concentric 80/125			Concentric 100/150			
	A min (mm)		168			190			
	Lmax (m)	G20	15	10		10		8	6
		G31	15	10		10		8	--
	Lmin (m)	G20	0			0			
		G31	0			0			
Suction pipe vertical type C33	Terminal C33 black		--			--			
	Terminal C33 ochre		--						
	Ø duct		Concentric 80/125			Concentric 100/150			
	A (mm)		85						
	Lmax (m)	G20	15	10		10		8	6
		G31	15	10		10		8	--
	LMin (m)	G20	0			0		0	
		G31	0			1		0	

The Lmax lengths are the lengths excluding the terminal and 90° elbow for the type C13 and excluding the terminal for the type C33.

In addition, in calculating the duct length, take the following equivalences into account:

- 90° elbow = 1 m of straight duct
- 45° elbow = 0.5 m of straight duct

The terminal location must comply with the rules in § 4.3.3.

Use a minimum slope of 3% towards the boiler.

For type C13, drill a 150mm hole in the wall for the 80/125 terminal and a 180 diameter hole for the 100/150 terminal. Seal the air vent terminal into the wall with polyurethane foam to allow for removal if necessary.

To ease fitting coat the joints with water only.

4.3.7. Condensate removal

Removal to the drains, via a drain hopper, using a P.V.C tube (minimum diameter 32 mm) is mandatory because the condensates are acid and thus aggressive (pH between 3 and 5).
Use a sufficient slope of the order of 3% to ensure correct flow of the condensates.

IMPORTANT: **Neutralise these condensates before removal according to the current regulations.**

4.4. Gas connection

Before installing the boiler, clean the interior of the gas line, which must be free of metal particles and welding debris. This will lengthen the lifespan of the product.
Before starting up for the first time, check that the pressure of the natural gas supply corresponds to the nominal boiler pressure, stated on the name plate.

The gas valve is fitted with an integrated filter (125µm), but this is not able to retain all the impurities contained in the gas and in the mains pipes. To avoid any malfunction of the gas valve, we advise the fitting of a suitable filter to the boiler gas supply (50µm).
If the gas valve pressure tap is used, ensure that it is closed to avoid any leakage while running.
Before feeding gas to the installation, ensure that the different connections are correctly made and gas tight.

In particular check the presence of a removable connector between the isolating valve and the boiler gas supply tapping.
The value before the gas valve must be within the limits shown in the table in chapter 2.4 for the type of gas.

IMPORTANT:
Before connecting the gas line, check whether the boiler uses G20, or G31 gas. If it uses G31, make the changes described in chapter 4.5.
When operating the boiler with natural gas containing a hydrogen (H_2) content of up to 20%, refer specifically in chapter §4.5.
The gas line must not be subject to any mechanical stress (risk of loss of gas tightness of the gas valve).
Check that the natural gas supply corresponds to the nominal boiler pressure, stated on the information plate.

4.5. Changing gas (G20 to G31 for only 40 to 120 kW boilers)

This EVO S boiler has been adjusted in the factory to work with group H (type G20) natural gas with a supply pressure of 20 mbar.

IMPORTANT: **Any operations involving changing the type of gas used must be performed by a qualified professional.**

The valve must be adjusted on the boiler operating at the maximum power and the minimum power. To change gas type, use the operation mode "Manual power adjustment" (see point 3.3.4 in the instructions for the NAVISTEM B3100 boiler controller) which enables the user to switch straight to the minimum or maximum setpoint value (i.e. to zero or full power).

IMPORTANT: **The settings have been approved for the gas supply pressures at the valve inlet (measured on the pressure meter before the gas valve and with the burner working) in the following tables.**

CAUTION: **Since the combustion is adjusted with the door open, check that the combustion is clean after installing the front door.**

CAUTION: **The setting mechanism must be sealed once the operation is complete. All damaged seals must be replaced.**

4.5.1. installing the propane injector

IMPORTANT: **ONLY for 70, 80,100 and 120 kW boilers.**

Change the type of gas by installing an injector at the gas valve outlet.
Close the gas feed valve and switch off the electric power supply.
Disconnect the electric cable and connect on the gas valve.

Unscrew the nut upstream of the valve and the 4 screws (see figure 11 below) and remove the valve from the boiler.

Unscrew the 4 screws of the elbow flange (see below).

Install the injector.

Reassemble the whole.

IMPORTANT: **Always replace the washers on the two nuts.**
Check the seals.

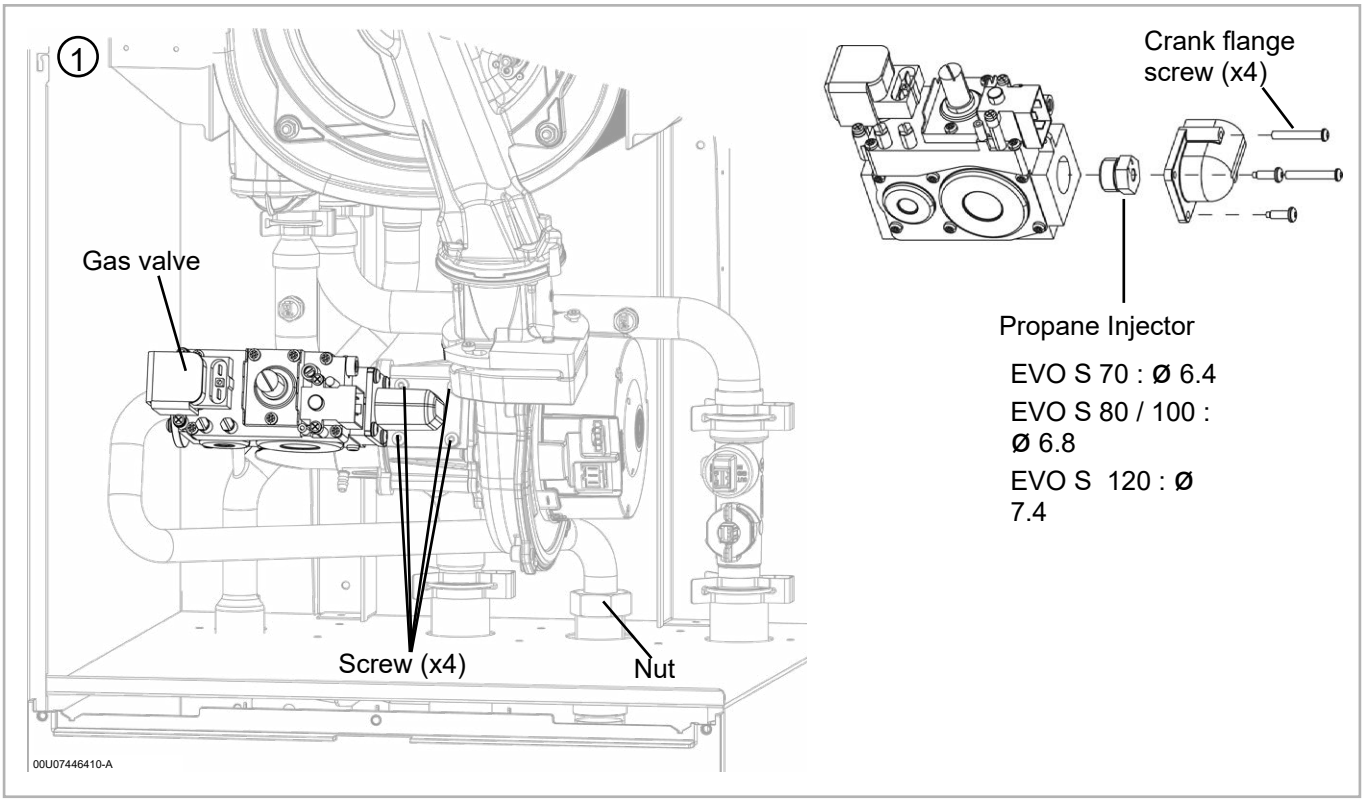

Figure 11 - Installing the propane injector

CAUTION: **Systematically replace the gaskets at the nut and the elbow flange. Check the tightness.**

4.5.2. Changing the ignition, pre-ventilation, minimum and maximum speeds

Place the boiler in standby mode (see § 3.3.1 of the NAVISTEM B3100 boiler command table instructions).

If necessary, press the ESC button to return to the main screen.

Open the menu ***Settings / Safety unit***.

Adjust the pre-ventilation speed (9504), ignition speed (9512), minimum speed (9524) and maximum speed (9529) settings:

Models	Gas	9504	9512	9524	9529
40	G20	4090	2430	2430	8740
	G31	4090	3910	2350	8340
60	G20	4220	3280	2500	9500
	G31	4220	3610	2400	9100
70	G20	4930	3160	2540	9500
	G31	4930	3260	2400	9000
80	G20	3100	1930	1930	5500
	G31	3100	1870	1870	5500
100	G20	3100	1930	1930	6450
	G31	3100	1870	1870	6450
120	G20	2900	2120	2070	7400
	G31	2900	2360	2000	7200

4.5.3. Adjusting the gas valve

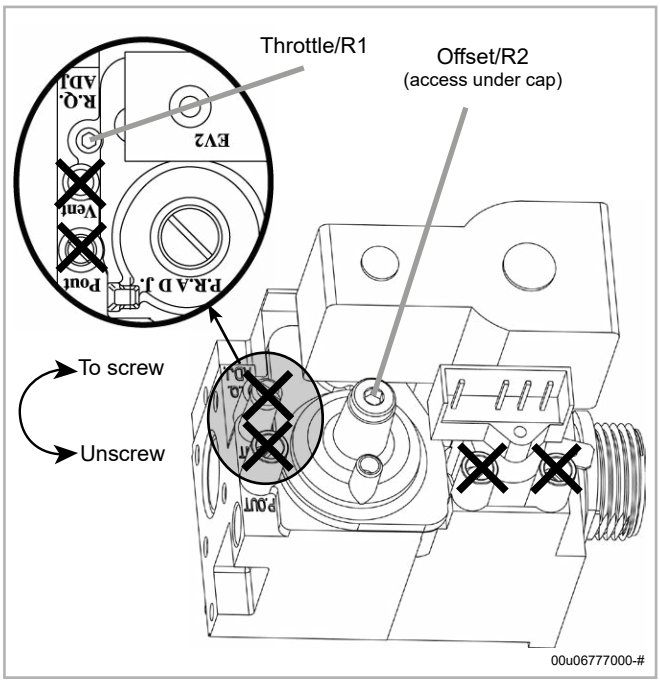

Figure 12 - EVO S 40 to 60 setting

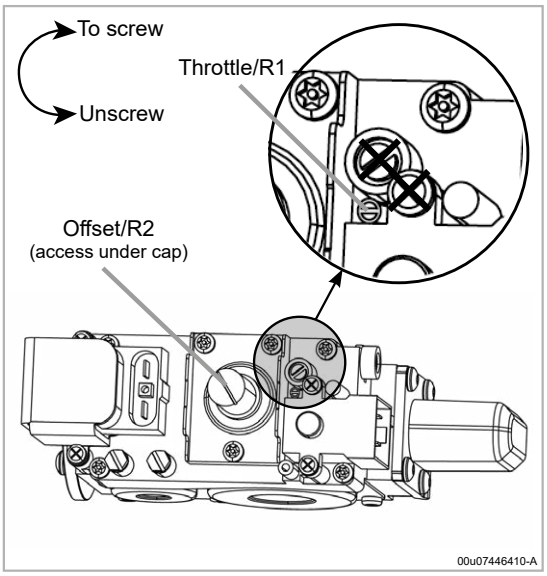

Figure 13 - EVO S 70 to 120 setting

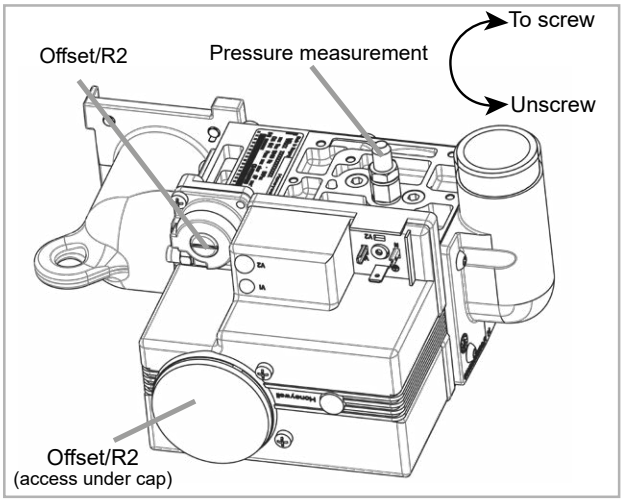

Figure 14 - VR415 for 150 kW model

- Before starting the burner, on the gas valve, preset the gas flow rate, using the gas flow rate adjustment screw Throttle/R1, to the appropriate value given in the table below.
- Start the burner at maximum power.
- Using a combustion analyser, measure the CO2 ratio in the exhaust gases: on the gas duct, remove the plug from the opening and insert the CO2 measurement sensor into the centre of the flow in the exhaust duct.
- Check the CO2 value at maximum power Qmax and, if necessary, adjust the gas flow screw Throttle/R1 of the valve in order to obtain the CO2 values in the table below.
- Change to minimum power Qmin and check that the CO2 value is within the range in the table below. If necessary, use the setting adjustment screw Offset/R2.
- If the setting is adjusted at minimum power, go back to maximum power Qmax and recheck the CO2 value. Repeat the operation until both values comply with the table below.
- Return to the standard operating mode.

After changing the type of gas:

- **Check the sealing of the gas line.**
- **Stick the G31 label provided in place of the original label (G20).**

			Checking door open settings		Checking the door closed settings	
Model	**Gas**	**Throttle gas flow adjustment screw preset and Offset regulator setpoint adjustment screw / G20**	**CO_2 Pmax**	**CO_2 Pmin**	**CO_2 Pmax**	**CO_2 Pmin**
40	G20	Throttle open 6.75 turns / on closing	8.7 - 9.1	9.5 - 9.8	8.8 / 9.2	9.6 / 10
	G31	2 closing turns on throttle	10.2 - 10.6	10.7 - 11	10.3 / 10.7	10.8 /11.2
60	G20	Throttle open 8.25 turns / on closing Closed throttle of 9 1/2 turns / maximum opening	8.8- 9.2	9.5-9.9	8.8 / 9.2	9.6 / 10
	G31	2 closing turns on throttle	10.2 - 10.6	10.7 - 11.1	10.3 / 10.7	10.8 /11.2
70	G20	Throttle open 2.5 turns / on closing Throttle closed 5 turns / at maximum opening	8.8 -9.2	9.5 - 9.9	8.8 / 9.2	9.6 / 10
	G31	0.5 turns closed on throttle	10.2 - 10.7	10.7 - 11	10.3 / 10.7	10.8 /11.2
80	G20	Throttle open 2.5 turns / on closing (unscrew)	8.7-9.1	8.7-9.0	8.8 / 9.2	8.8 / 9.2
	G31	0.5 closing turns on throttle (screw) 0.5 closing turns on offset (screw in)	9.7 - 10.1	10 - 10.4	9.8 / 10.2	10.2 / 10.6
100	G20	Throttle open 2.5 turns / on closing (unscrew)	8.7-9.1	8.7-9.0	8.8 / 9.2	8.8 / 9.2
	G31	0.5 closing turns on throttle (screw) 0.5 closing turns on offset (screw in)	9.7 - 10.1	10.1 - 10.4	9.8 / 10.2	10.2 / 10.6
120	G20	Throttle open 2.5 turns / on closing (unscrew)	8.7 - 9.1	8.8 - 9.1	8.8 / 9.2	8.9 / 9.3
	G31	0.75 turns of closure on throttle (screw) 1.25 turns of closing on offset (screw)	9.7 - 10.1	9.7 - 10.1	9.8 / 10.2	9.8 / 10.2

4.5.4. Operation with hydrogen (H_2)

INFORMATION: **If the boiler is operated with natural gas containing a gaseous hydrogen (H_2) content of up to 20%, the verification of combustion hygiene in the flue gas is carried out exclusively on the basis of the O_2 rate (%).**

Check O_2 setting.

WARNING: **If the boiler is operated with natural gas containing a hydrogen (H_2) content of up to 20%, the factory setting of the gas valve made at G20 should not be altered.**
Failure to comply with this setting carries the risk of damage to the installation (for example: overheating, premature aging, etc.) and can cause serious injuries (in particular carbon monoxide CO poisoning).

In the event of non-compliant adjustment, and after checking all other possible causes, please contact the after-sales service.

4.6. Hydraulic connection and pump adjustment

The boiler irrigation flow rate must be at least equal to Pinst/30 (Pinst = instantaneous power in Th/h - 1 Th/h = 1.163 kW).
The circulation pump must be sized according to the maximum power delivered (Not supplied).

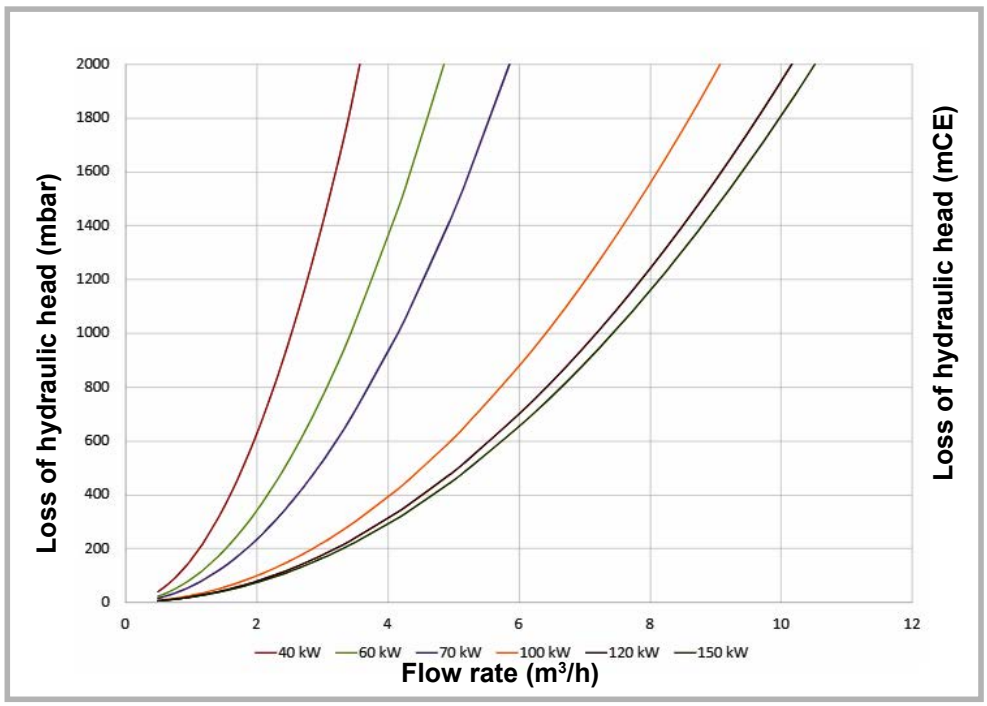

Figure 15 - Head losses

In the exchanger, when using a modulating circulator (not supplied), care must be taken never to exceed the nominal flow rates (Pnom/20) while ensuring that the minimum irrigation flow rates prescribed below are exceeded:

		MODELS in kW						
		40	60	70	80	100	120	150
Nominal water flow rate (Pnom/20)	m³/h	1.72	2.36	3.00	3.44	4.30	5.16	6.23
Minimum water flow rate	m³/h	0.57	1.15		2.30		3.00	3.44

The boilers are equipped with the following elements:
- a manual drain pipework,
- a flow sensor.

It is imperative to fit the boiler and its installation with the following components:
- isolating valves on the flow and return pipeworks,
- an expansion tank,
- an effective drain mechanism,
- a filling mechanism (to be installed on the return pipework),
- a drain mechanism.

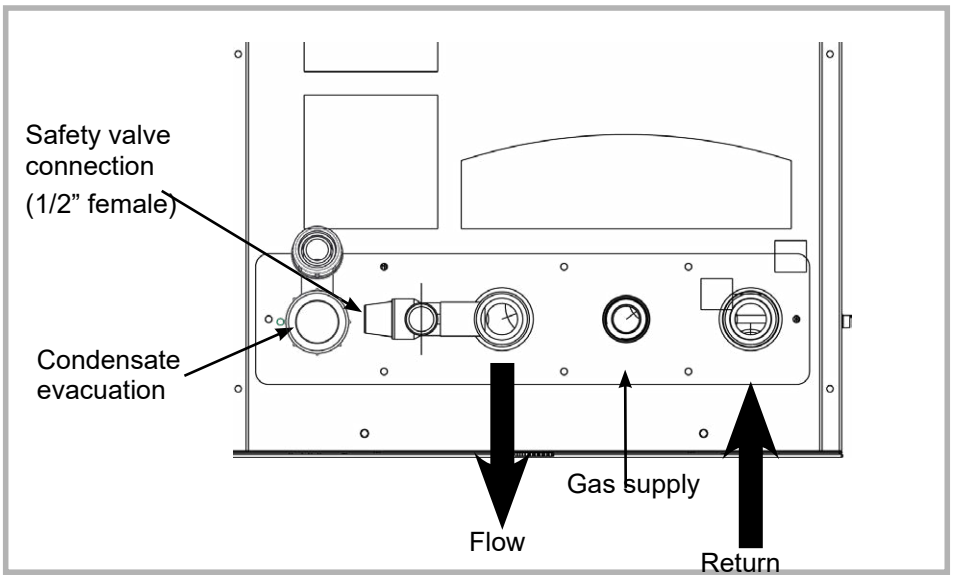

Figure 16 - Elements

Filling the installation:

The system must be fully vented to remove all air. This will be more effective if the boiler is filled slowly when cold, while keeping:

- the manual drain of the exchanger open,

When these two parts discharge a continuous flow of water that is free of air, close them and stop filling.

INFORMATION: **Limit hydraulic noise by carefully purging the installation, limiting water speeds, and letting the pipes expand freely.**

IMPORTANT: **If there is a risk of freezing, start up the installation then leave the boiler powered (refer to the Navistem B3100 manual). If the boiler cannot remain powered, take the necessary precautions against freezing (draining may be a solution).**

After filling with water:

- Check the water pressure on the pressure gauge (not included). This must be a maximum of 4 bar for 40 to 70 kw models or a maximum of 6 bar for 80 to 150 kW models when hot, and **a minimum of 1 bar when cold**.
- Check that the boiler and its installation are completely free of air (check the boiler levelling with a spirit level).

IMPORTANT: **Do not forget to close the drain before starting up.**

Condensate removal:

Removal to the drains, via a drain hopper, using a P.V.C tube (minimum diameter 32 mm) is mandatory because the condensates are acid and thus aggressive (pH between 3 and 5).

Use a sufficient slope of the order of 3% to ensure correct flow of the condensate.

IMPORTANT: **Neutralise these condensate before removal according to the current regulations.**

4.7. Electrical connection

WARNING:	**Ensure that the general electrical power supply has been cut off before starting any repair work.**
CAUTION:	**It is mandatory to connect this boiler correctly to earth and to comply with standard for low-voltage electrical installations.** **Provide a two-pole circuit breaker upstream of the boiler (distance between contacts: 3.5 mm minimum).** **Fitting the electrical installation with a 30 mA differential protective device is strongly advised.**
IMPORTANT:	**The front plastic panel must be replaced before starting up the boiler.**
ATTENTION :	**Compulsory use of the connector supplied with the product.**

Please refer to the installation and user manuals of the NAVISTEM B3100 boiler controller for more information about the electrical connections on the control panel (characteristics of the electric power supply, cable cross-sections and connections to the terminals).

4.7.1. Control panel

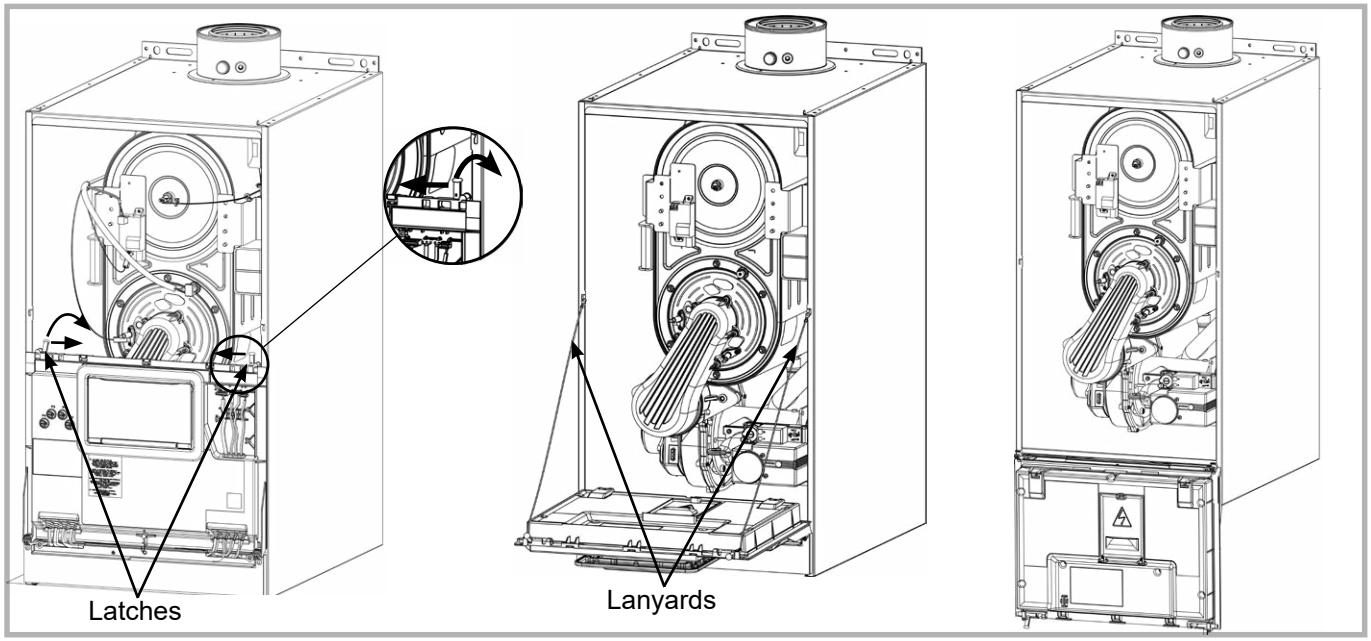

Figure 17 - Access to NAVISTEM B3100

00U07444570-A

To access the control panel, remove the front of the boiler see chapter 4.2. Push the latches forward and slide them inwards to unlock and tilt the control box. It is possible to completely tilt the control box by removing the lanyards, in order to facilitate access to the interior of the boiler.

CAUTION :	**Do not place anything on the control panel.**

4.7.2. Cable ways

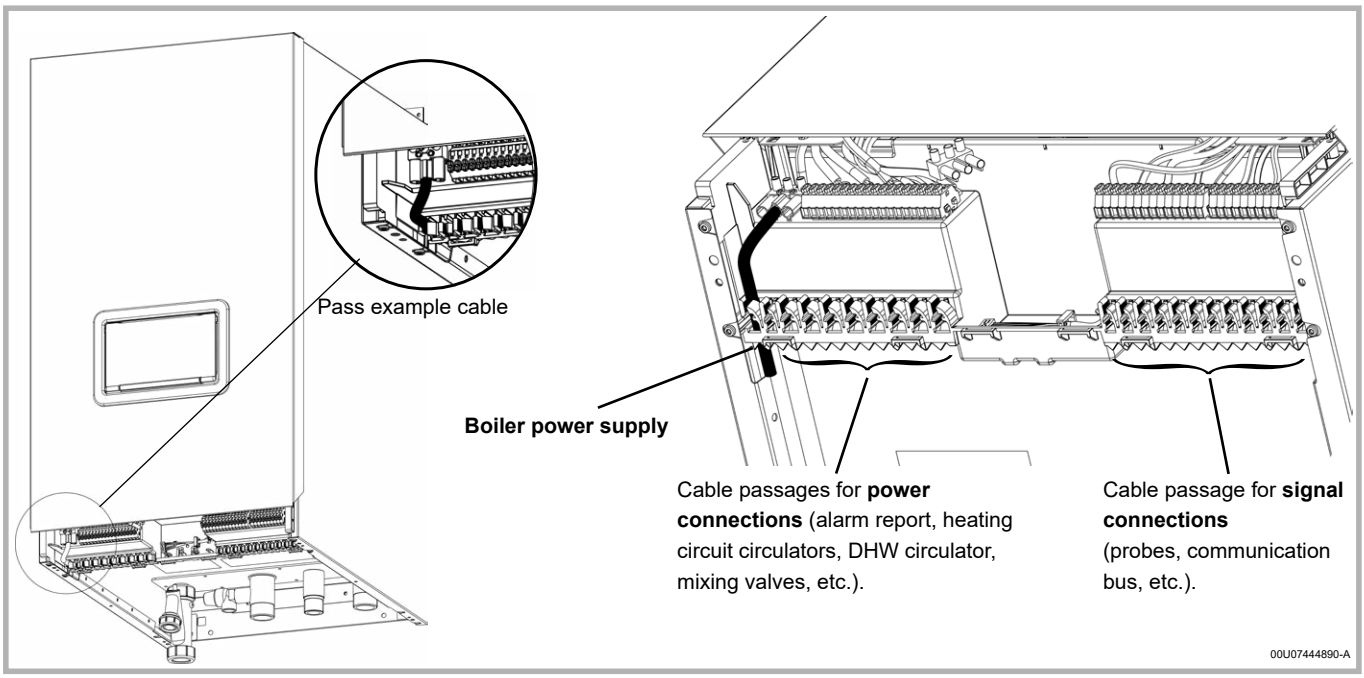

Figure 18 - Packing glands

Cable	Terminal strips	Copper conductor cross-section
Power supply	Power supply	3 x 1,5 mm²
Power	QX1, QX2, QX3	3 x 1 mm²
Signals	BX2, BX3, B3, B9, H1, H5, UX2, UX3, ambient temperature sensors	2 x 0,5 mm²

4.7.3. Wiring diagram

Refer to § 2.3 in the B3100 NAVISTEM manual for more information about the terminal block connections.

	Cascade flow sensor
	Cascade return sensor
	DHW sensor
	Outdoor sensor
C° 0-10V	Prog client input 0...10V
	Prog client dry contact input

	Room sensor inputs
	Boiler flow sensor
	Boiler return sensor
	Flue sensor
	Alarm relay
	Modulating pump

4.7.4. Connections to terminals

To connect the NAVISTEM B3100 boiler controller, please refer to the installation and user manual.

4.7.5. Connection of the boiler circulation pump (compulsory accessory)

4.7.5.1. Accessory supplied by ACV

If the accessory is supplied by ACV, please refer to appendix list.

4.7.5.2. Accessory supplied by the customer

The circulation pump is controlled by a 230 VAC (1A max.) output on the NAVISTEM B3100 panel.

This output is active when a request for heat is in progress on the boiler.

If the circulation pump does not have a remote control:

Directly wire the power supply of the circulation pump (230 VAC - 1A max.) to the terminal QX3 (contacts L3, N and ⏚) on the NAVISTEM B3100 panel. If the circulation pump has electronic control, or is high efficiency, or consumes more than 1A, the power supply must be via a contactor.

If the circulation pump is equipped with a dry-contact On / Off control:

Connect the power supply of the circulation pump directly from your electric panel.
Use the VFC pump control option kit..

If the circulation pump is equipped with a 0-10V control:

Connect the power supply of the circulation pump directly from your electric panel.
Use PWM to 0-10V conversion option kit..
Set the speed parameters for the 2321, 2322 and 2323 boiler pumps (*Boiler* menu) to the same value.

4.7.6. Fuses

The EVO S boiler is fitted with four fuses on the boiler controller (refer to the label on the protective cover for their positions and characteristics).

Three spare fuses are also provided on the boiler controller.

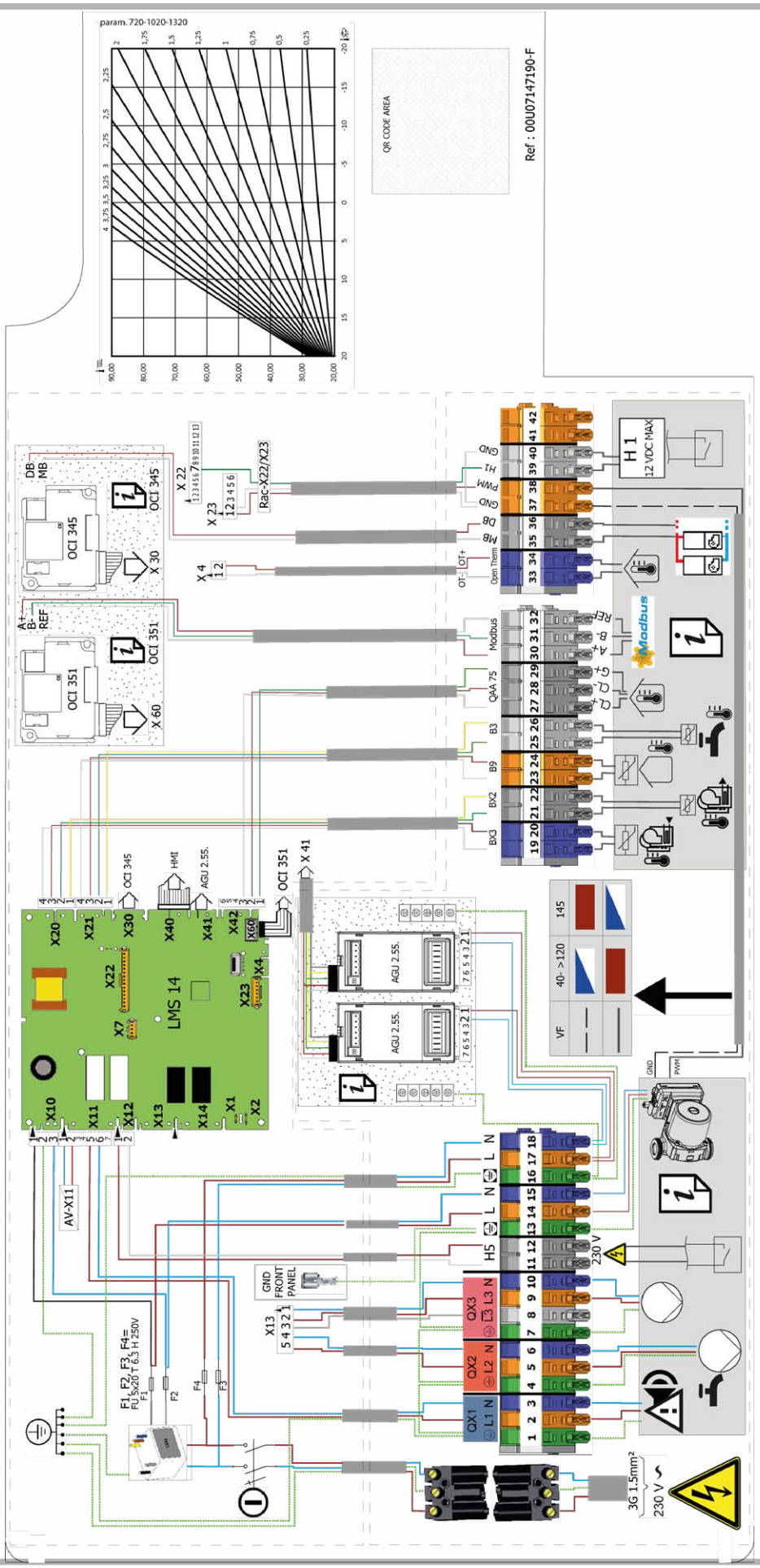

Figure 19 - Wiring diagram

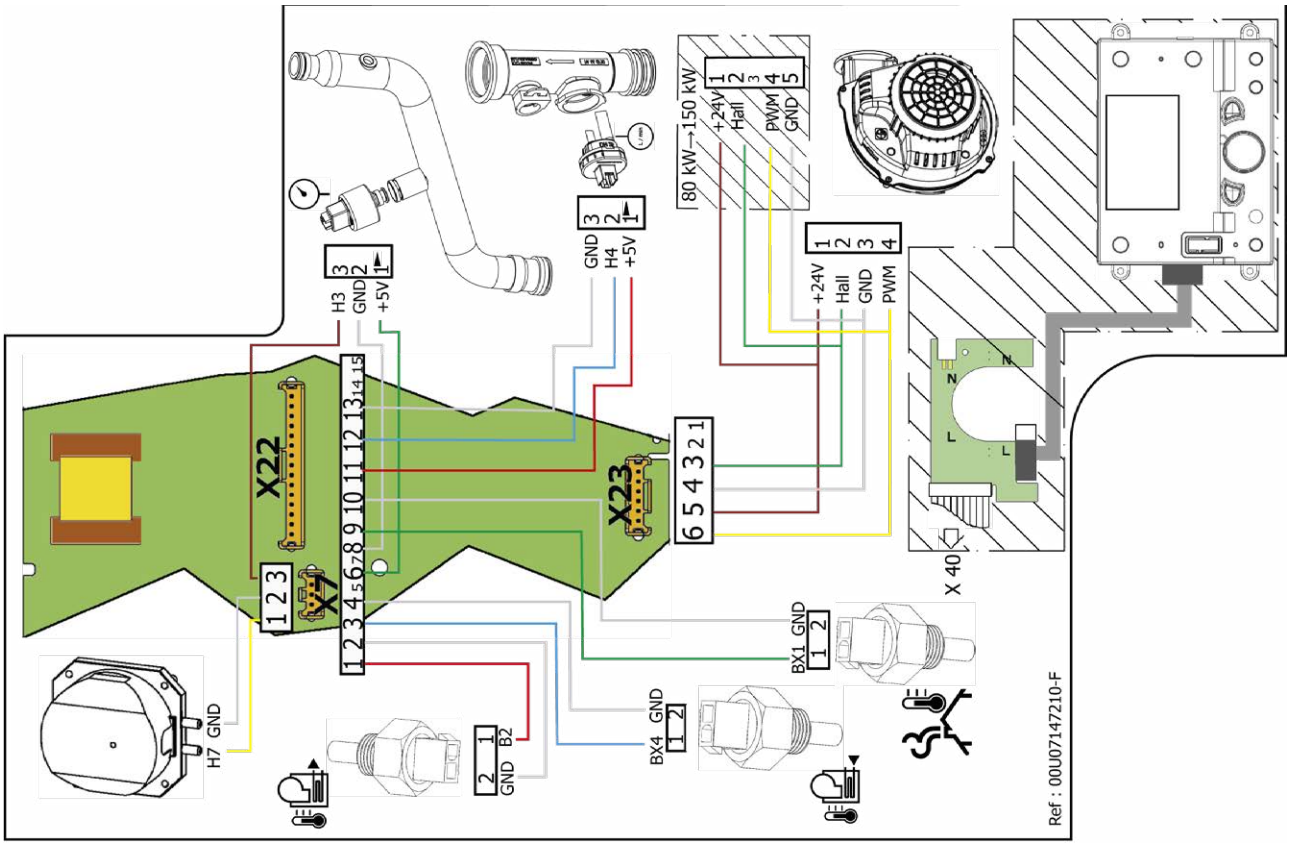
X22
X23
X7
H3
GND
+5V
GND
H4
+5V
80 kW→150 kW
+24V
Hall
PWM
GND
+24V
Hall
GND
PWM
H7
GND
B2
GND
BX4
GND
BX1
GND
X 40
Ref : 00U07147210-F

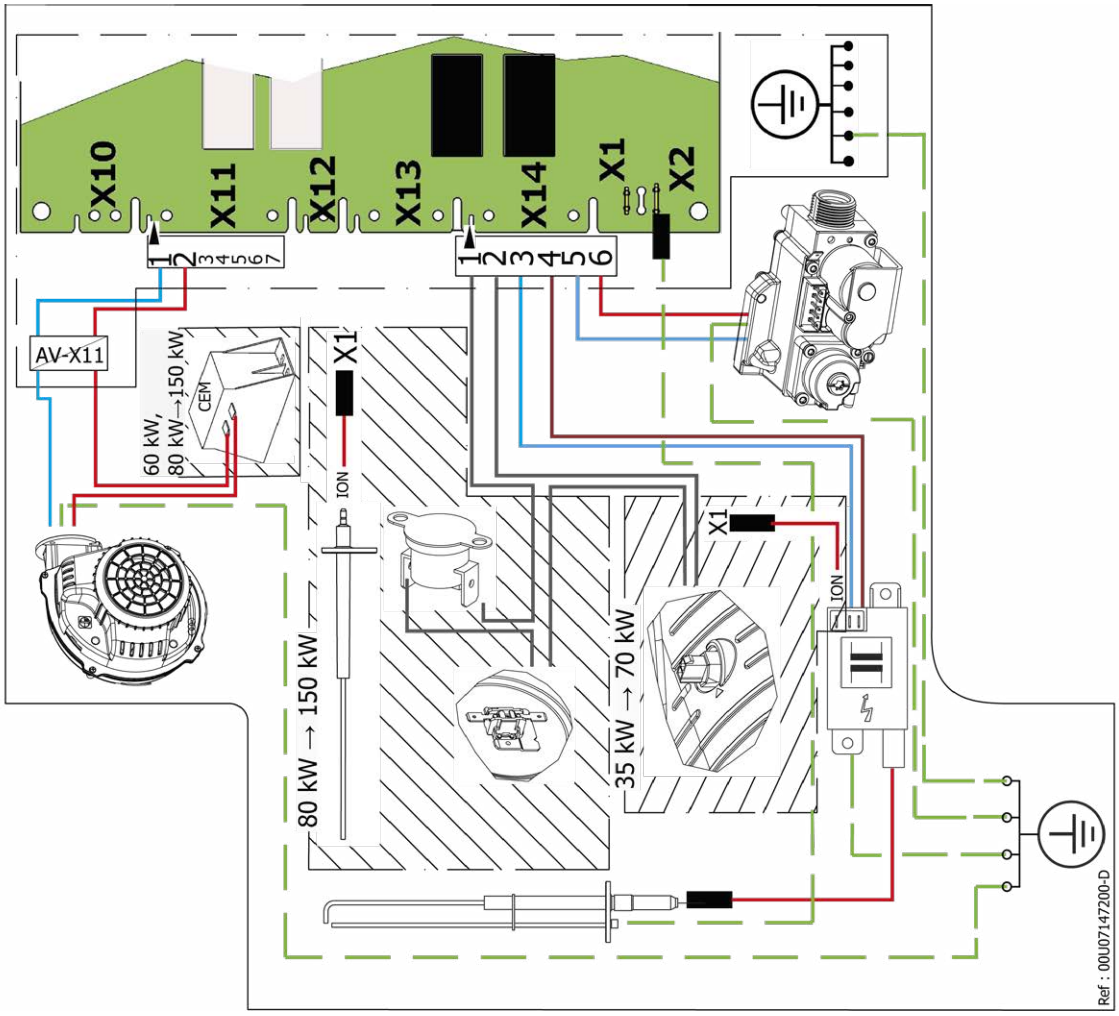
X10
X11
X12
X13
X14
X1
X2
AV-X11
60 kW,
80 kW→150 kW
CEM
X1
ION
80 kW → 150 kW
35 kW → 70 kW
X1
ION
Ref : 00U07147200-D

5. FIRST USE

5.1. Checks before first use

Check that the cold pressure is a minimum of 1 bar.
If this is a boiler house renovation, ensure that flushing and if necessary silt removal from the installation have been correctly done (see paragraph 1.5, page 8 of this manual).

Verify the connecting of the gases according to the type of chimney.

Check that the pressure and the type of gas are adapted to the product.

WARNING: **Ensure that the control panel's rear hatch is correctly closed. And that no water can splash on the control panel.**

WARNING: **The use of glycol water is forbidden.**

IMPORTANT: **The use of the connection accessories is mandatory to connect a EVO S boiler to a B23 or B23P chimney duct.**

5.2. First use

Before packing all boilers are subjected to a factory test using group H (type G20) natural gas during which all the settings are done.
If the appliance is to be used on Group P gas G31 the boiler must be modified and adjusted to operate correctly.

<u>For first use perform the following operations:</u>

1. Switch on the main circuit breaker.
2. Create a request for heat via the comfort mode using the customer interface (see the chapter ***"3 - User interface"*** in the NAVISTEM B3100 boiler controller manual).
3. After starting the burner, check the gas tightness of the gas line connections using a leak detection spray. Check combustion using a flue gas analyser. The range of CO_2 or O_2 values to be respected depends on the operating gas: refer to the tables in chapter §3.3. In the event of non-compliant combustion hygiene, it may be necessary to adjust the gas valve setting according to the instructions in chapter §4.5.

INFORMATION: **If the boiler is operated with natural gas containing a gaseous hydrogen (H_2) content of up to 20%, the verification of combustion hygiene in the flue gas is carried out exclusively on the basis of the O_2 rate (%).**

4. Adjust the boiler setting (refer to the table summarising customer parameters at the end of this manual).

IMPORTANT: **Any work on a sealed component will invalidate waranty.**

6. CHECKS AFTER COMMISSIONING

6.1. Condensate removal

Check that the removal of condensate is not obstructed, on both the boiler side and the pipe side.

6.2. Gas supply

Check that the gas pipe diameter is correctly sized:

It is necessary to stop all the boilers together abruptly using the boiler room main circuit breaker to check that the gas pressure regulator safety device is not triggered.

If this is triggered, the gas pipe is undersized. After this operation, reengage the circuit breaker. The boilers must start automatically, if not, consult the supplier of the gas pressure regulator.

7. MAINTENANCE OPERATIONS

UK would require Gas Safe installer. In IE by a Registered Gas Installer (RGII).

Before performing the following operations:

- **Switch off the main circuit breaker.**
- **Close the gas supply isolation valve.**
- **Isolate the boiler hydraulically.**

DESIGNATION	PERIOD
Clean the exchanger (see details in the next chapter)	**ANNUAL**
Visually inspect the heat exchanger for sooting. If required remove the soot using a non-metallic brush. Chemical cleaning is not allowed.	
Ignition / ionisation electrodes (see details in the next chapter)	**ANNUAL**
Check the geometry of the ignition electrode (gap width) and the ionising electrode. If necessary, replace the electrodes.	
Condensate removal siphon	**ANNUAL**
Clean the removal siphon and check that the condensate flows correctly. Ensure the siphon is topped up with water after replacing	
Check the gas valve and the differential air pressure switch. Check the connection of the pressure transfer pipe.	**ANNUAL**
Carry out a combustion check.	

7.1. Draining the boiler

Operation to be performed when cold

- Hydraulically isolate the boiler (in the case of an installation with our cascade packs, isolation valves are located at the level of the collectors),
- Reduce the pressure by opening the boiler bleeder,
- Open the drain valve of the installation or the one supplied with our hydraulic kits,
- Finish draining the outlet pipe by activating the safety valve.
- Periodic check of the hydraulic safety valve.

7.2. Annual checks

- Switch off the electric power supply of the boiler,
- Close the gas supply,
- Remove the front panel (see § 4.2).

WARNING: **Protect all the electric connectors inside the control panel when working on the boiler hydraulics (risk of splashing).**

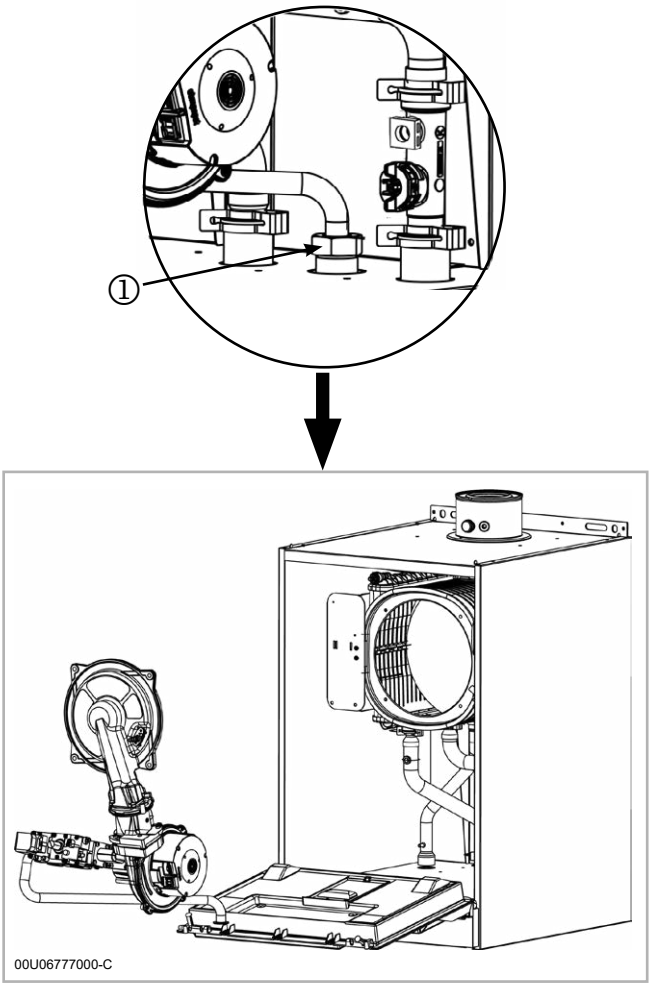

Figure 20 - Assembly to be dismantled for inspection

- Disconnect the gas pipe after the gas valve ①,
- Disconnect the electrodes, the fan and the air transfer pipe at the air pressure switch,
- Unscrew the 4 M6 door fixing nuts ,
- Remove the burner holder assembly, fan, venturi, gas valve and its tubing and gently place it on a clean place*.
- If there are any deposits in the combustion chamber, brush the tubes of the exchanger with a non-metallic brush. **Chemical cleaning of the combustion chamber with an acid or alkaline product is forbidden**. Vacuum clean the deposits.
- If the refractory insulation at the bottom of the combustion chamber and of the burner support is damaged, then it must be replaced.
- If the level of condensates in the combustion chamber has risen due to poor evacuation, the refractory insulation at the bottom of the combustion chamber and of the burner door must be replaced.
- Replace the seals on the burner holder if they are damaged.
- The burner rail does not require any maintenance. Replace it, if damaged.

*

IMPORTANT: **Be very careful when handling the 150 kW boiler's burner due to its heavy weight.**

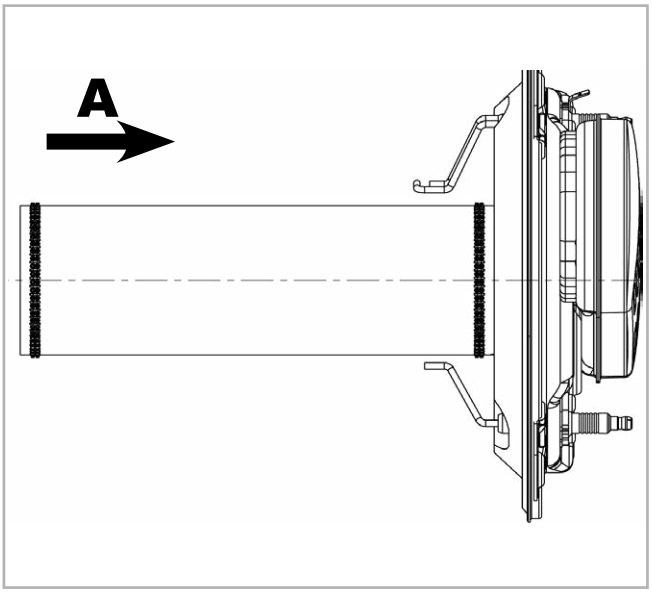

Figure 21 - Side view of the burner

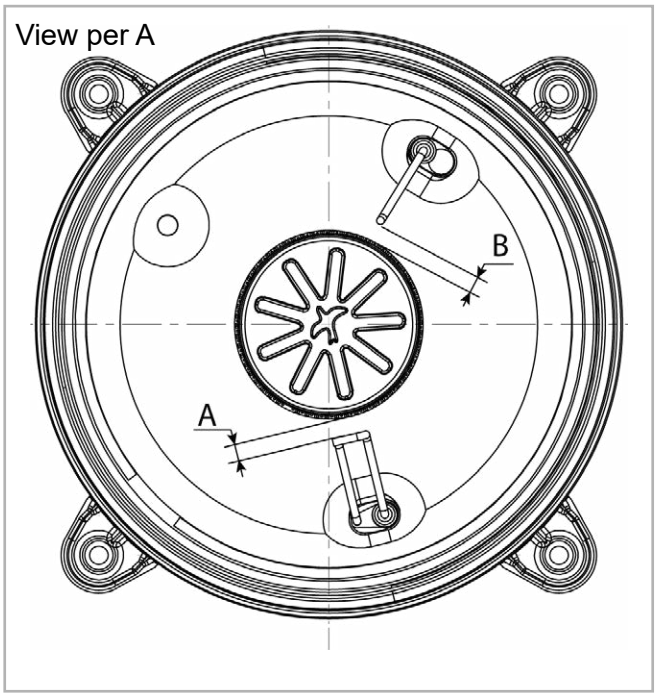

Figure 22 - Position of the burner electrodes

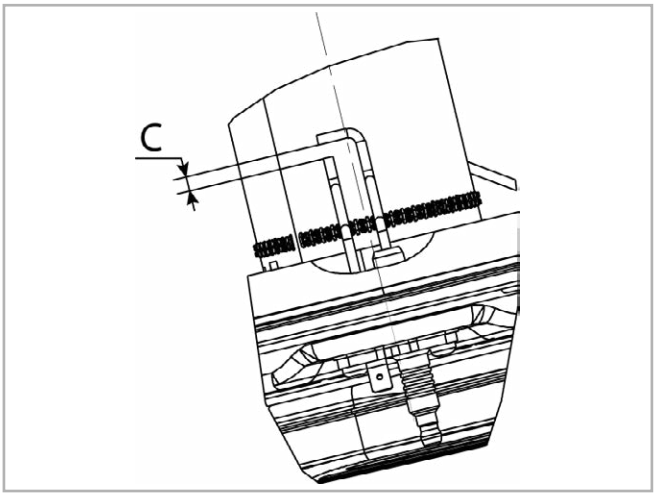

Figure 23 - Geometry of the electrodes

- The geometry of the electrodes, the absence of alumina deposit, the appearance of the ceramic and the seals must be checked. If the electrodes and gaskets are damaged, replace them.
- Clean the siphon and check the correct flow of condensates through it. The siphon must be filled with water after maintenance.
- Install the burner door and tighten the M6 nuts in rotation (four nuts on 40 to 70 kW models, six nuts on 80 to 150 kW models). Maximum tightening torque: 5 Nm.
- Connect the gas supply.
- Check that the gas circuit is sealed with a foaming product.
- Install the control panel.
- Switch on the electric power supply.
- Start the boiler, check that the burner door is properly sealed and check the combustion. The rate of CO2 must comply with the values in the table in paragraph 4.5.
- Install the front panel and check the combustion with the door closed.

	40 to 70 kW	80 to 150 kW
Rating A (mm)	10	8
Rating B (mm)	Not applicable	10
Rating C (mm)	4.5	5.0

8. END OF PRODUCT LIFE

Regulatory disposal and managed recycling of this product can prevent damage to the environment and health risks.

a) For the disposal of the product and the component parts, the services of an accredited waste disposal company should be used.

b) For more information on waste disposal/management, contact the Local Authority responsible for waste management or the point of sales where the product was purchased

9. HYDRAULIC DIAGRAMS AND CONFIGURATIONS

9.1. Symbols used in the diagrams

Symbol	Function
	Isolation valve open
M	Motorised 2-channel valve
	Filtered
GS	Safety unit
	Sediment trap
	Outdoor sensor

Symbol	Function
	Balancing valve
M	Motorised 3-channel valve
	Anti-return flap
	Pump
	Bleed valve
	Temperature sensor

9.2. List of diagrams

BOILER ONLY **53**

Control from and existing BMS 53
EVO S-1

Control 1 mixed circuit and production of DWH 58
EVO S-2

2 regulated circuits, 1 direct circuit with low limit and production of DWH 63
EVO S-3

4 regulated circuits, and DHW production 69
EVO S-4

1 non-regulated circuit with sliding flow 77
EVO S-20

DHW production with tank with coil 81
EVO S-24

CASCADED BOILERS **84**

Without control of the secondary communications networks 0...10V or LPB 84
EVO S-10

2 regulated circuits per boiler and production of DHW 91
EVO S-11

BOILER ONLY *Control from and existing BMS*	Diagram ***EVO S-1*** page 1 / 5

A. HYDRAULIC DIAGRAM

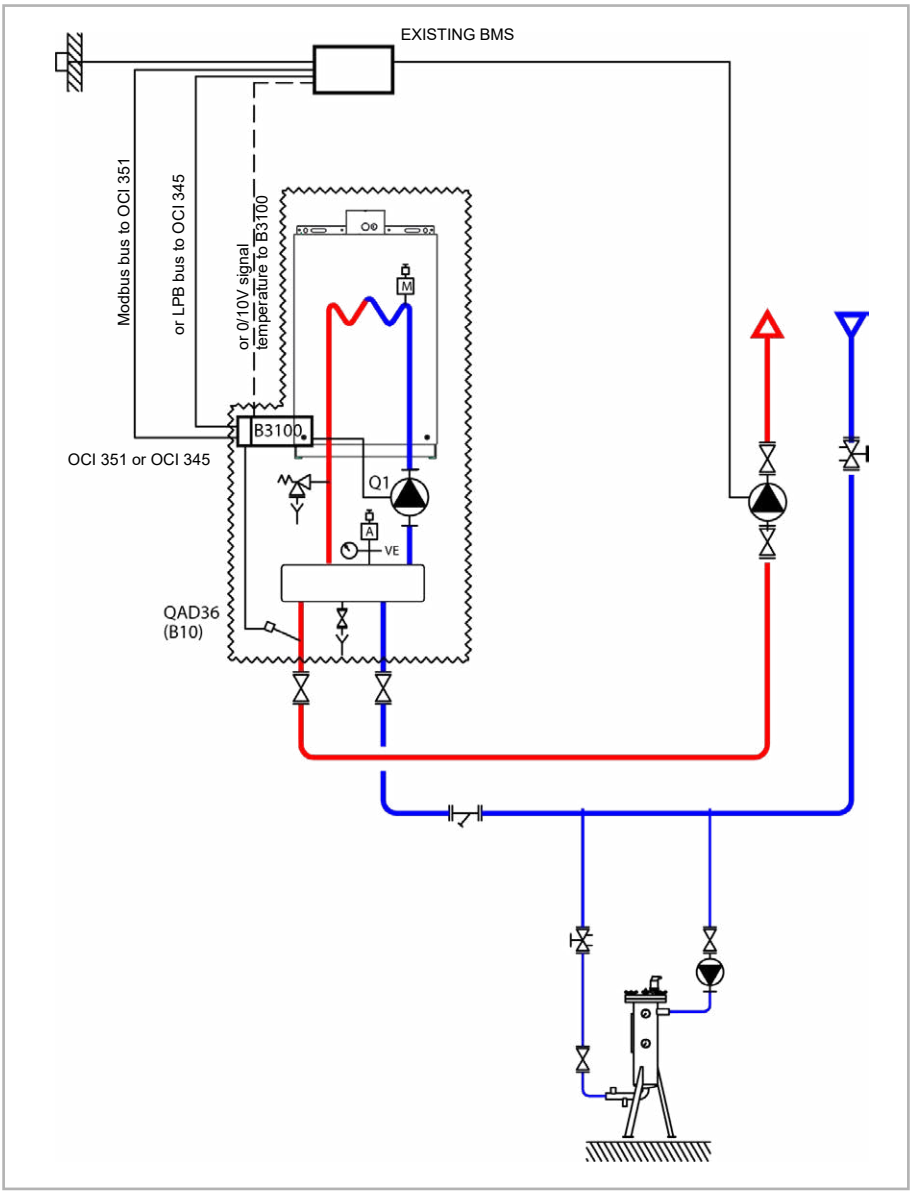

Figure 24 - VFO1 diagram

B. OPTIONAL ACCESSORIES

	Quantity	**Appliance reference**
Communication kit for LPB bus	1	OCI 345
Communication kit for Modbus bus	1	OCI 351

Diagram: EVO S-1	page 2 / 5

C. RECOMMENDED HYDRAULIC ACCESSORIES

We offer a wide range of hydraulic accessories, including support frame and header kits and hydraulic separation options. Please refer to specific ACV literature for detailed information on these products.

D. OPERATING DESCRIPTION

The existing regulation system controls the installation's heating circuit.
It sends the outlet temperature set point to the boiler, either over the LPB bus through the OCI 345 interface (SIEMENS protocol), either by a 0 - 10 V signal, sent directly to the NAVISTEM B3100, or over the Modbus bus through the OCI 351 interface.
When controlled by the external regulator, the boiler operates according to a sliding temperature scale when it starts for the heating, according to the outdoor temperature.

Diagram: EVO S-1	page 3 / 5

E. CUSTOMER'S ELECTRICAL CONNECTION

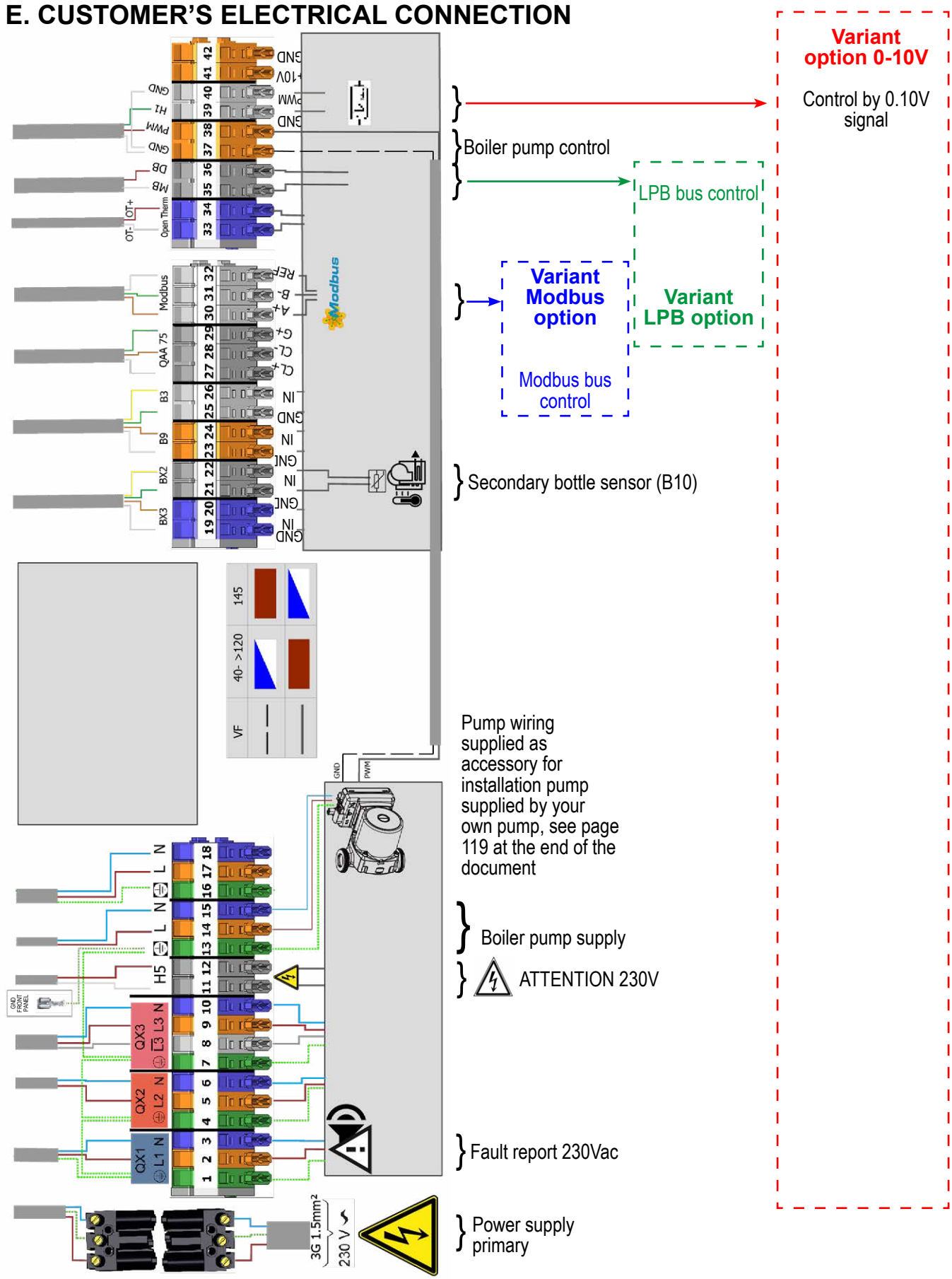

Diagram: EVO S-1	page 4 / 5

F. SPECIFIC START-UP PROCEDURE

☞ Correctly install and connect the electrical connections.

☞ Make the settings below in "specialist" mode:

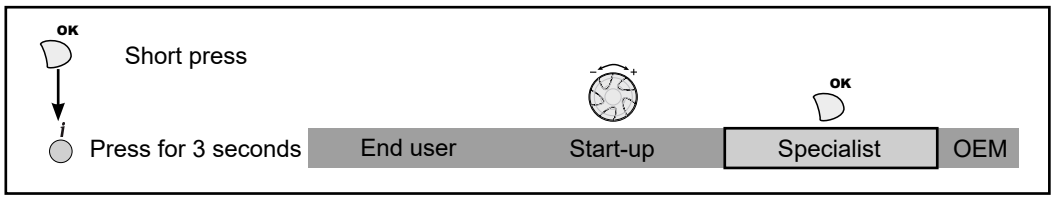

	Line No.	Value
• **Time and date *menu***		
Set the time	Hour / minute (1)	HH.MM
Set the date	Day / month (2)	DD.MM
Set the year	Year (3)	YYYY
• **Configuration *menu***		
Configure the secondary flow sensor	Bx2 sensor input (5931)	B10 line output sensor
For a request via 0...10V input		
• **Configuration *menu***		
Configure the H1 input	H1 input function (5950)	10V consumption circ. request
	H1 function 2 value (5956)	1000 (for equivalence 10 V = 100 °C)
Save the sensors so that they are taken into account by the system	Save sensor BX3 (6200)	Yes (switches back to no automatically)

<u>Warning</u>: the boiler considers a heat request for a H1 voltage > 0.2 V and a resulting setpoint > 6°C*.
The boiler no longer considers a heat request for a H1 voltage < 0.2V or a resulting setpoint < 4°C*.
*: according to the scale entered in parameter 5956

Diagram: EVO S-1

	Line No.	Value
• **Option:** to keep the generator at a stop, even if the 0...10V signal is different from 0		
Configure the input that allows blocking	H5 input function (5977)	Blocked generator, waiting
Reverse logic to define the release	Input action direction H5 (5978)	

For a request via LPB

• **LPB network *menu***

Set the addresses and segments from the following settings in your PLC

	Appliance address (6600)	1
	Segment address (6601)	0
For your PLC to be the timestamp master	Clock operation (5955)	Slave with adjustment

For a request via Modbus

• **Setup *menu***

Configure input H1 :

	Function input H1 (5950)	Consumer circuit request 1
	Contact action direction (5951)	Work

• **Modbus *menu***

In the boiler's Modbus elements, set the

	Slave address (6651)	As it is set on your PLC
	Baud rate (6652)	As it is set on your PLC
	Parity (6653)	As it is set on your PLC
	Stop bit (6654)	As it is set on your PLC

The Modbus register for sending the boiler flow temperature setpoint

Modbus address		Line No.	No. register	Data	Access		Possible values	Data type	Coefficient
Decimal	Hexa	B3100			Read.	Writ.			
13313	3401	1859	1	Consumer departure instruction 1 dry contact	✓	✓	8... 120,°C	U16	1/64

Refer to the "ELECTRICAL VALIDATION" chapter for the regulator input/output tests.

BOILER ONLY *Control 1 mixed circuit and production of DWH*	Diagram ***EVO S-2*** page 1 / 5

A. HYDRAULIC DIAGRAM

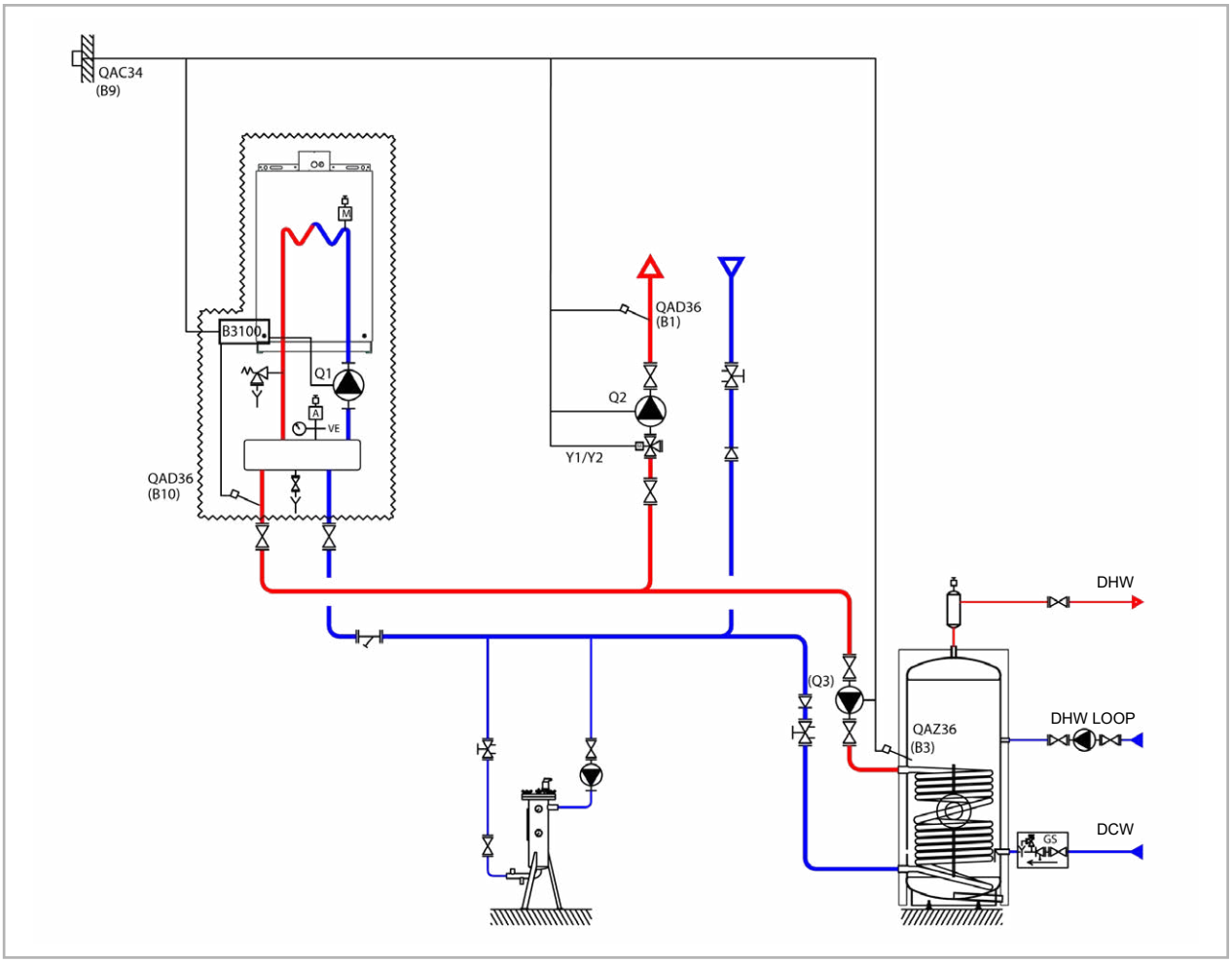

Figure 25 - EVO S-2 diagram

B. OPTIONAL ACCESSORIES

	Quantity	Appliance reference
Outdoor sensor kit	1	QAC 34
DHW sensor kit	1	QAZ 36
Boiler pump supplied by the customer (all-or-nothing control) Extension module kit (delivered with a network sensor QAD 36)	1	AGU 2.550

Diagram: EVO S-2	page 2 / 5

C. RECOMMENDED HYDRAULIC ACCESSORIES

We offer a wide range of hydraulic accessories, including ssupport frame and header kits and hydraulic separation options. Please refer to specific ACV literature for detailed information on these products.

D. OPERATING DESCRIPTION

The water law of the heating circuit is programmed on the NAVISTEM B3100 with a weekly heating programme.
An external contact, which could be produced by a 2-position switch or a normally closed timer relay, is used to remotely activate the comfort mode. This configuration means that the user can switch to comfort mode when the heating circuit is in reduced mode.
The AGU 2.550 interface built into the boiler is used to control the two three-way regulating valves of the heating network.
The boiler operates in variable flow temperature according to the outdoor temperature measured by the exterior sensor QAC 34, without a low temperature limit.
The production of domestic hot water is controlled by the NAVISTEM B3100 using the QAZ 36 sensor in the tank.

Diagram: EVO S-2	page 3 / 5

E. CUSTOMER'S ELECTRICAL CONNECTION

POWER CONNECTION

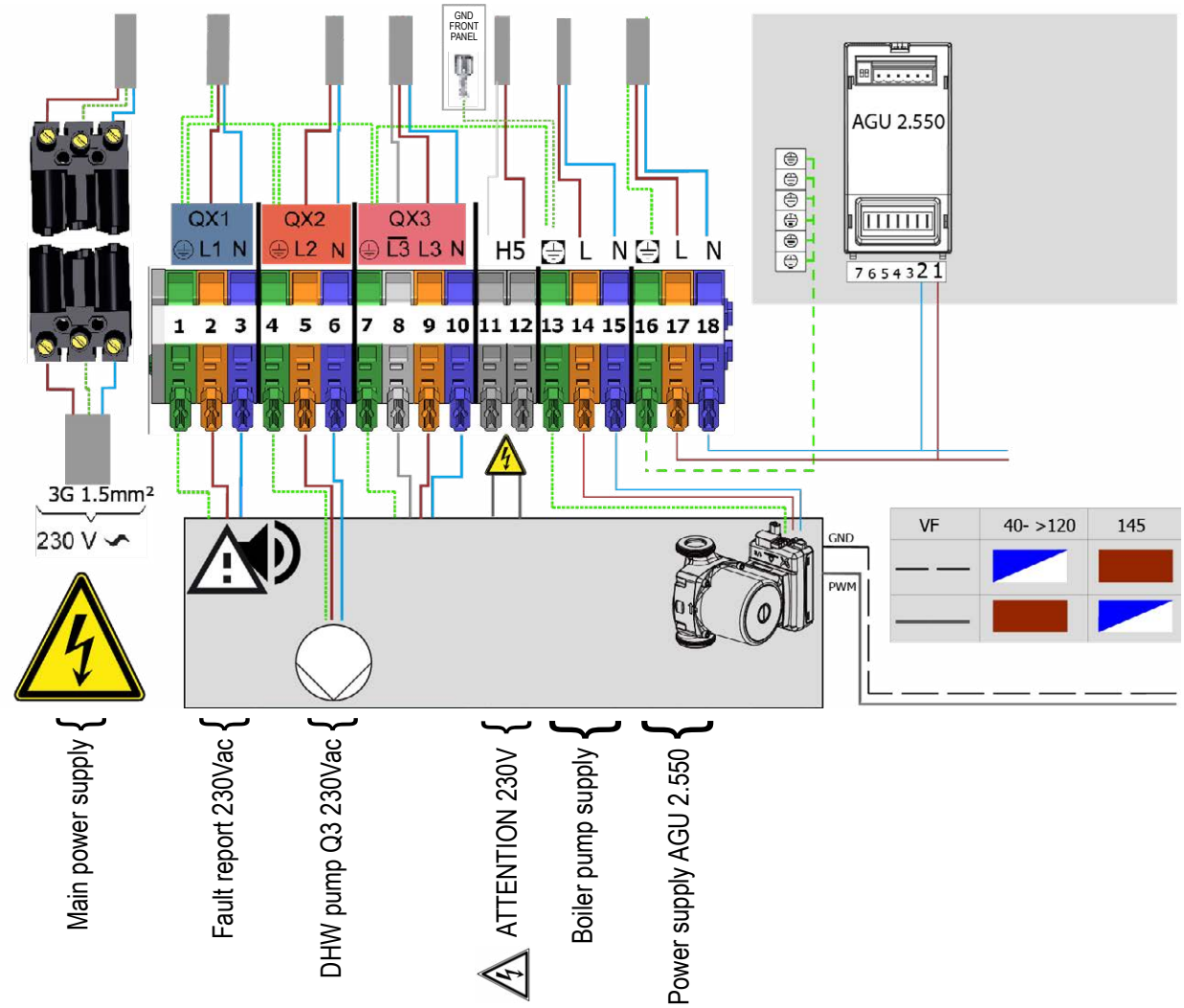

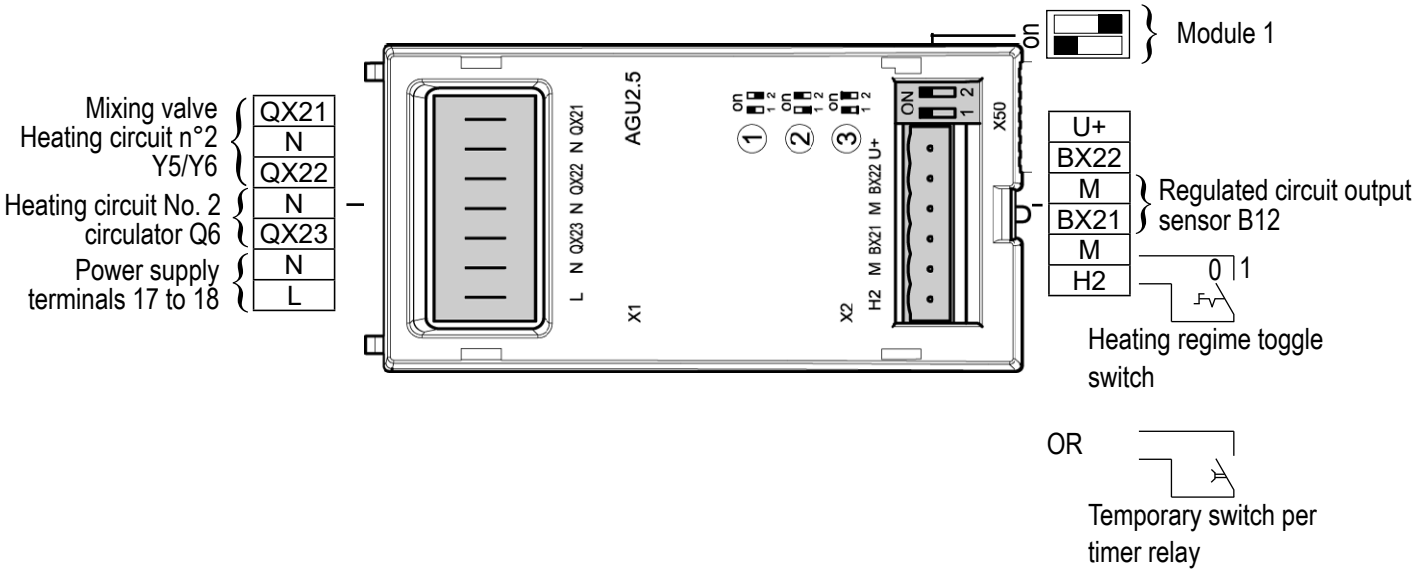

Diagram: EVO S-2	page 4 / 5

SIGNALS CONNECTION

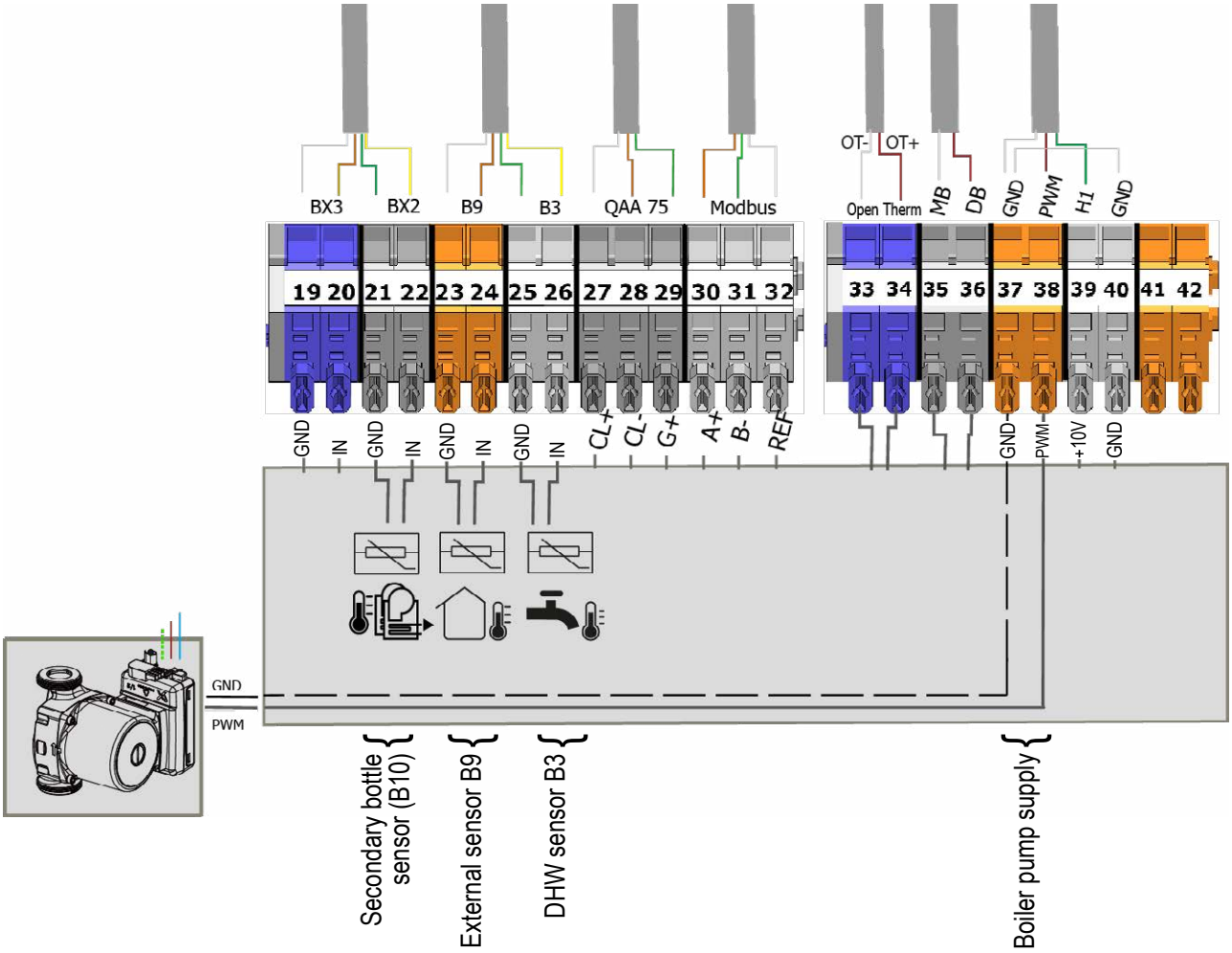

F. SPECIFIC START-UP PROCEDURE

☞ Correctly install and connect the electrical connections.

☞ Make the settings below in "specialist" mode:

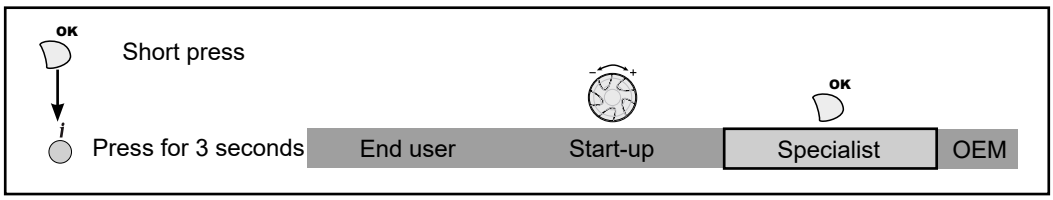

	Line No.	Value
• **Time and date *menu***		
Set the time	Hour / minute (1)	HH.MM
Set the date	Day / month (2)	DD.MM
Set the year	Year (3)	YYYY

Diagram: EVO S-2

	Line No.	Value
• Configuration *menu*		
Start up heating circuit 1	Heating circuit 1 (5710)	Start
Configure the alarm output	Relay output QX1 (5890)	Alarm output K10
Configure the DHW pump output	Relay output QX2 (5891)	DHW pump Q3
Configure the secondary flow probe	BX2 sensor input (5931)	B10 line output sensor
Configure the expansion module	Extension module function 1 (6020)	Heating circuit 1
Configure the input for remotely switching the heating mode	Module 1 H2 input function (6046)	Switching of heating circuit operation1
Save the sensors so that they are taken into account by the system	Save sensor (6200)	Yes (switches back to no automatically)
• Heating circuit 1 menu		
Adjust the comfort setting	Comfort setting temperature (710)	---°C
Adjust the heating curve slope	Curve slope (720/1020/1320)	---
Switching to comfort mode with H2 contact	Regime switching (900)	Comfort
Switch the heating regime to permanent comfort	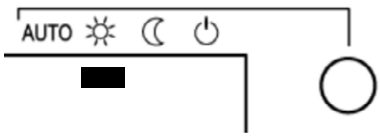	
• Domestic hot water *menu*		
Adjust the DHW setpoint	Comfort setting (1610)	---°C
Activate the DHW mode	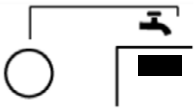	

Refer to the “ELECTRICAL VALIDATION” chapter for the regulator input/output tests

Refer to the "OPTIMISATION" chapter for configuring the time slots for the heating and DHW circuits as well as for programming the anti-legionella cycles.

BOILER ONLY *2 regulated circuits, 1 direct circuit with low limit and production of DWH*	Diagram ***EVO S-3*** page 1 / 6

A. HYDRAULIC DIAGRAM

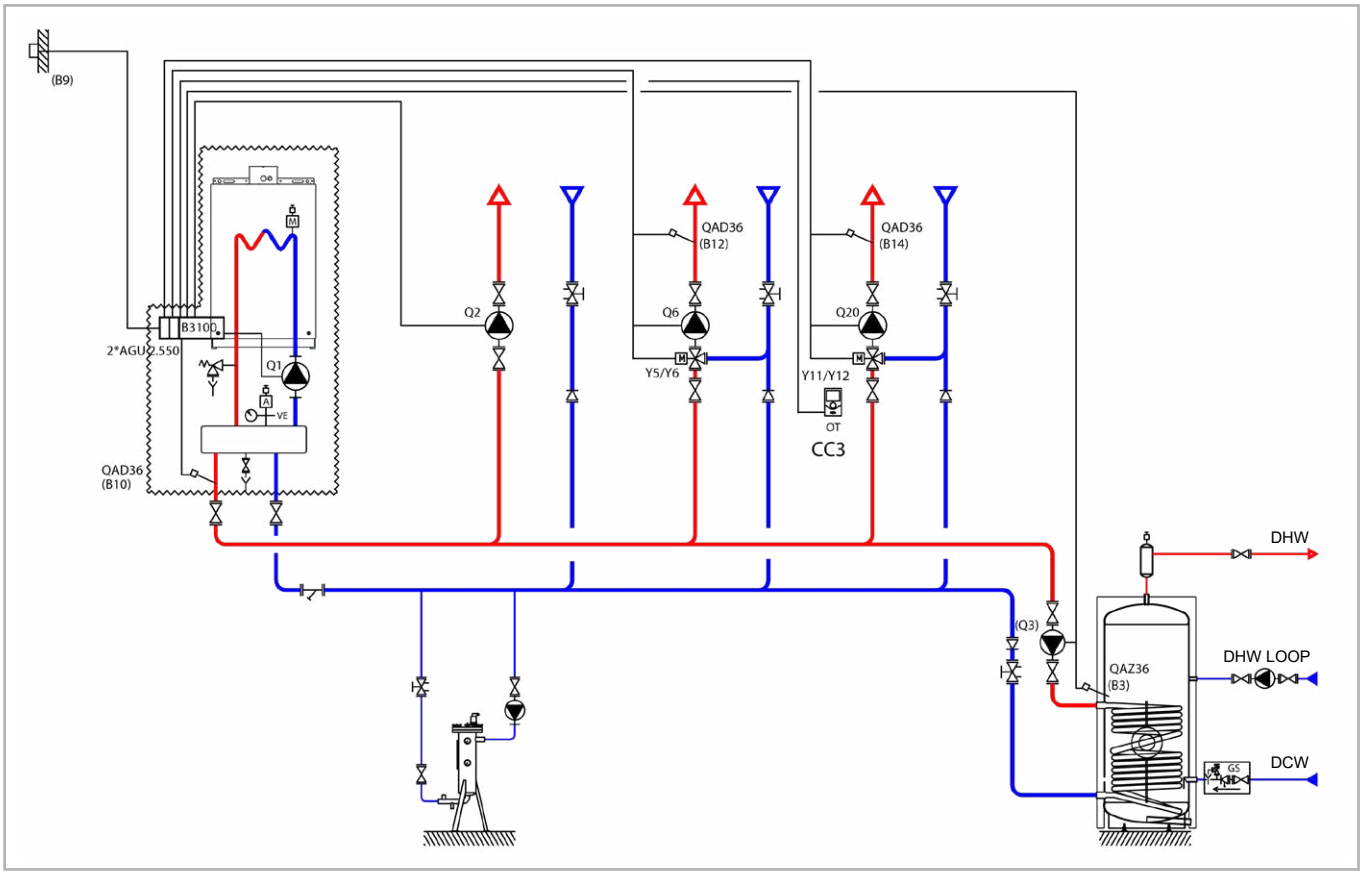

Figure 26 - EVO S-3 diagram

B. OPTIONAL ACCESSORIES

	Quantity	Appliance reference
DHW sensor kit	1	QAZ 36
Outdoor sensor kit	1	QAC 34
Extension module kit (delivered with a network sensor QAD 36)	2	AGU 2.550
or		
Opentherm room sensor respecting the V4.0 Opentherm specification	1	

Diagram: EVO S-3	page 2 / 6

C. RECOMMENDED HYDRAULIC ACCESSORIES

We offer a wide range of hydraulic accessories, including support frame and header kits and hydraulic separation options. Please refer to specific ACV literature for detailed information on these products.

D. OPERATING DESCRIPTION

The water law of the heating circuit is programmed on the NAVISTEM B3100 with a weekly heating programme.
The AGU 2.550 interfaces built into the boiler are used to control the two three-way regulating valves of the heating networks.
The boiler operates in variable flow temperature according to the outdoor temperature measured by the exterior sensor QAC 34, without a low temperature limit.
The production of domestic hot water is controlled by the NAVISTEM B3100 using the QAZ 36 sensor in the tank.

.

Diagram: EVO S-3	page 3 / 6

E. CUSTOMER'S ELECTRICAL CONNECTION

POWER CONNECTION

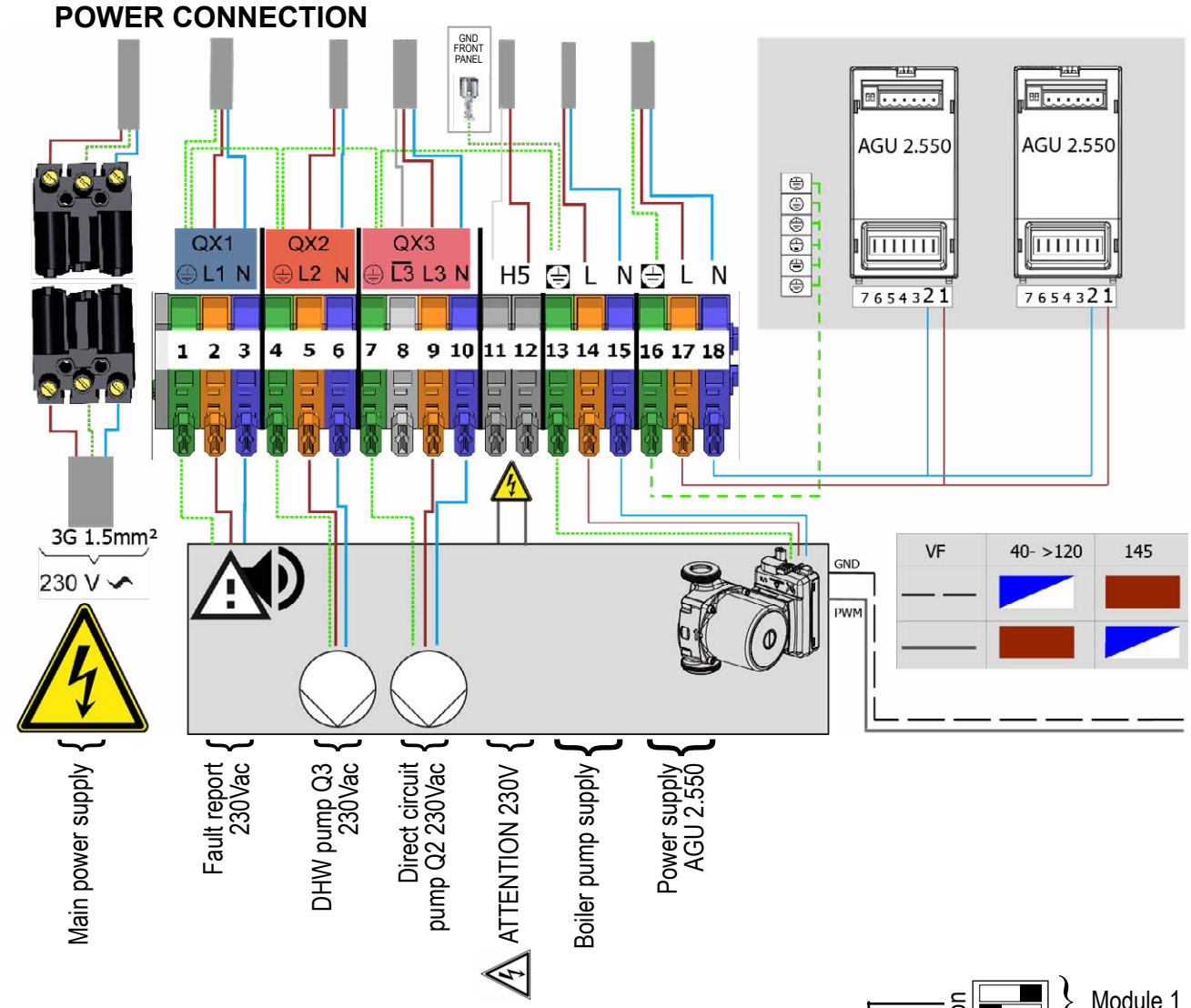

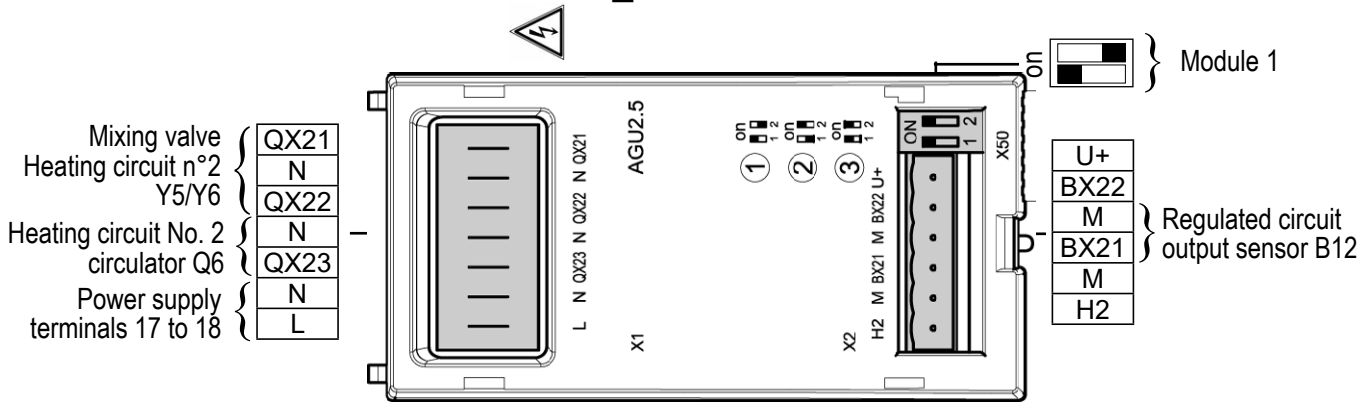

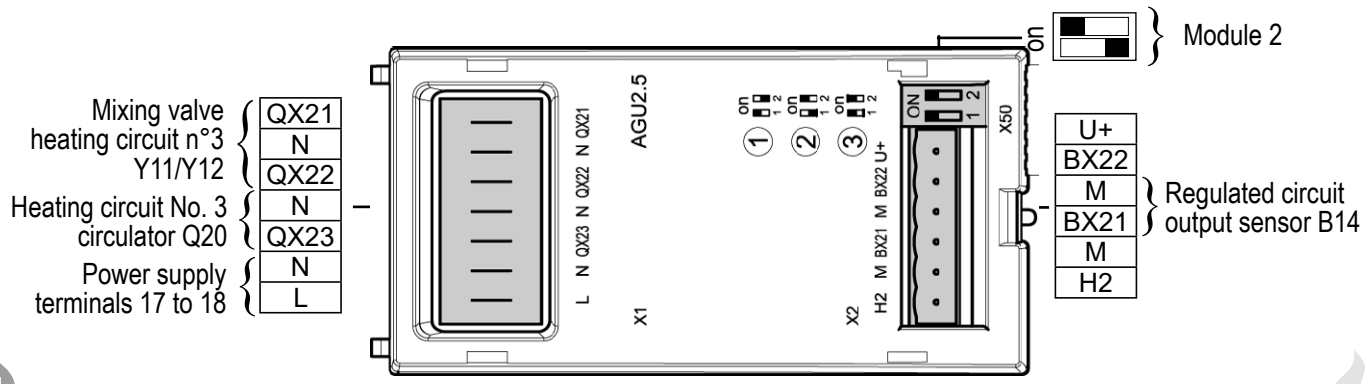

Diagram: EVO S-3

SIGNALS CONNECTION

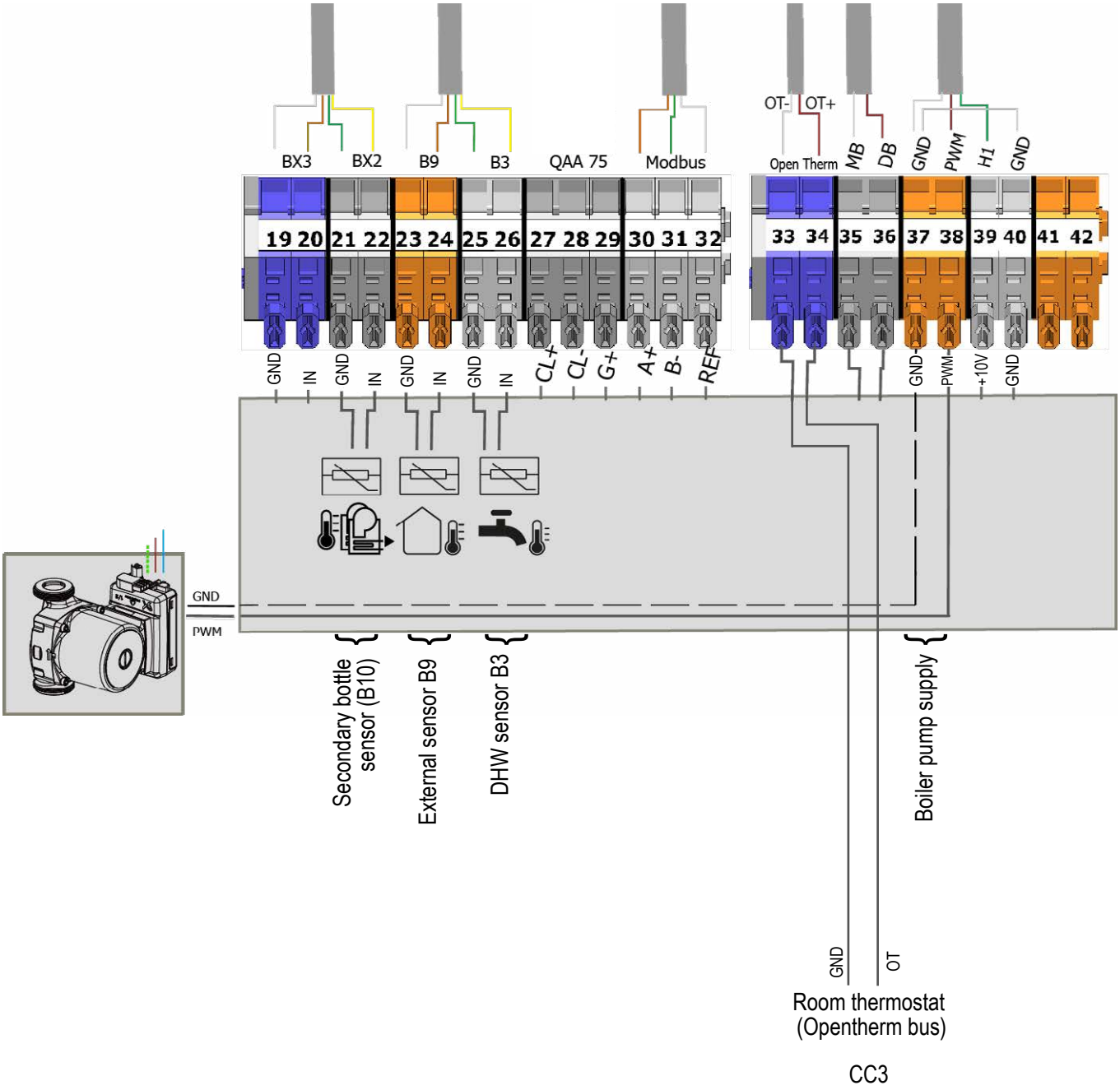

Diagram: EVO S-3	page 5 / 6

F. SPECIFIC START-UP PROCEDURE

☞ Correctly install and connect the electrical connections.

☞ Make the settings below in "specialist" mode:

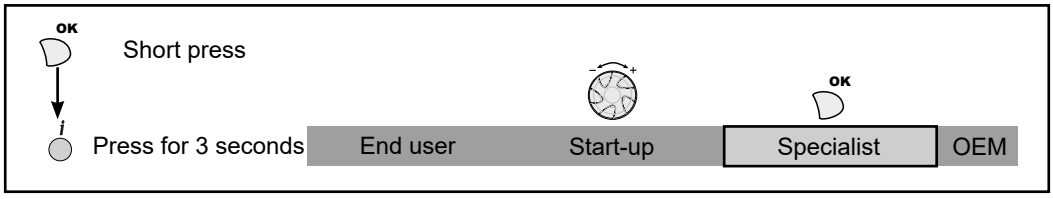

IMPORTANT: **configure the switches on the AGU 2.550 extension modules.**

	Line No.	*Value*
• **Time and date *menu***		
Set the time	Hour / minute (1)	HH.MM
Set the date	Day / month (2)	DD.MM
Set the year	Year (3)	YYYY
• **Configuration *menu***		
Configure the secondary flow sensor	BX2 sensor input (5931)	B10 line output sensor
Start up heating circuit 1	Heating circuit 1 (5710)	Start
Start up heating circuit 2	Heating circuit 2 (5715)	Start
Start up heating circuit 3	Heating circuit 3 (5721)	Start
Configure the alarm output	Relay output QX1 (5890)	Alarm circuit K10
Configure the DHW tank pump output	Relay output QX2 (5891)	DHW pump Q3
Configure the direct circuit pump Q2	Relay output QX3 (5892)	Pump CC1 Q2
Configure the extension modules	Extension module function 1 (6020)	Heating circuit 2
	Extension module function 2 (6021)	Heating circuit 3
Save the sensors so that they are taken into account by the system	Save sensor (6200)	Yes (switches back to no automatically)

Diagram: EVO S-3

	Line No.	Value
• Menu *Heating circuit 1/2/3*		
Adjust the comfort setting	Comfort setpoint temperature (710/1010/1310)	---°C
Adjust the curve slope	Curve slope (720/1020/1320)	---
Adjust the min. flow temperature for heating circuit 1	Minimum flow temperature setpoint (740)	60°C (adjust according to the lower limit)
Removal of the over-value	Over-value v. mixer (830)	0 °C

Switch the heating regime to permanent comfort

• Domestic hot water *menu*		
Adjust the DHW setpoint	Comfort setting (1610)	---°C

Activate the DHW mode

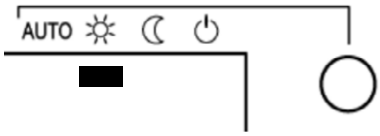

Refer to the “ELECTRICAL VALIDATION” chapter for the regulator input/output tests

Refer to the "OPTIMISATION" chapter for configuring the time slots for the heating and DHW circuits as well as for programming the anti-legionella cycles.

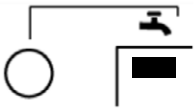

The Navistem B3100's internal heating circuit is deactivated but the settings devices can still be controlled. This means that all the internal functions of the Navistem B3100 related to heat request calculations are no longer active (heating curve, ambient influence, ambience controller, daily heating limiter, summer switching, time programming, operating mode button, accelerated temperature lowering, accelerated heating, frost protection of rooms, room thermostat, room temperature limit) and must be set on the external Opentherm thermostat. The Navistem B3100's internal functions, including the status information, are calculated internally and can therefore have an influence on the other functions in the case of a summer heating limit. This is why it is important to pay attention to the appropriate setting.

If a heating circuit is controlled by OT, the "AUTO" operating mode is displayed for this circuit. The operating mode button is blocked for this heating circuit. If the operating mode key is pressed the indication "Operating mode key blocked" is displayed.

BOILER ONLY *4 regulated circuits, and DHW production*	Diagram ***EVO S-4*** page 1 / 8

A. HYDRAULIC DIAGRAM

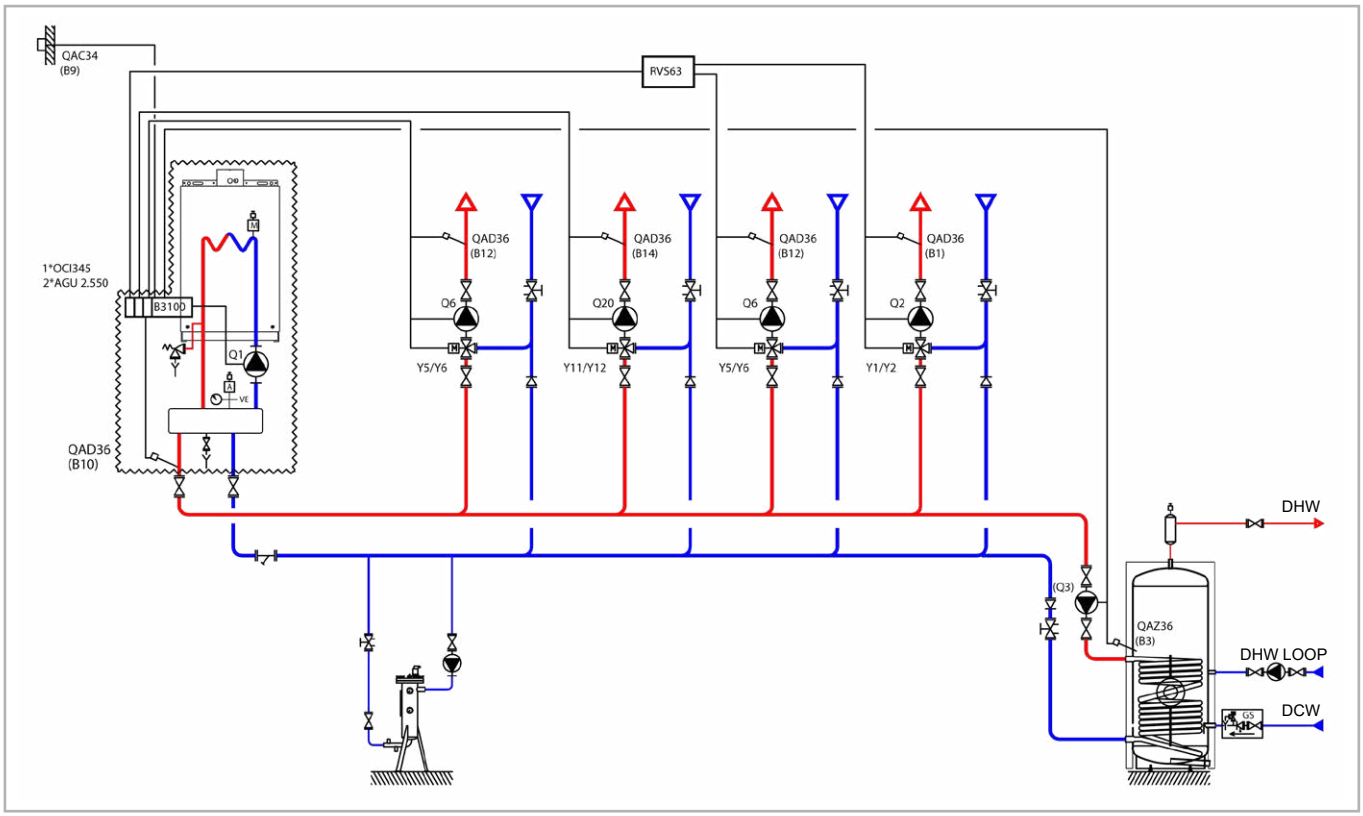

Figure 27 - EVO S-4 diagram

B. OPTIONAL ACCESSORIES

	Quantity	Appliance reference
DHW sensor kit	1	QAZ 36
Outdoor sensor kit	1	QAC 34
Extension module kit (delivered with a network sensor QAD 36)	2	AGU 2.550
Cascade regulator kit	1	RVS 63
Communication kit	1	OCI 345

C. RECOMMENDED HYDRAULIC ACCESSORIES

We offer a wide range of hydraulic accessories, including support frame and header kits and hydraulic separation options. Please refer to specific ACV literature for detailed information on these products.

Diagram: EVO S-4	page 2 / 8

D. OPERATING DESCRIPTION

The heating water law is programmed on the NAVISTEM B3100, with or without a low temperature limit and with a weekly programme.
The AGU2.550 interfaces are used to control the two three-way regulating valves of the heating networks. The other 2 will be controlled by the RVS63 integrated in an external unit.
The boiler operates in variable flow temperature according to the outdoor temperature measured by the exterior sensor QAC 34, without a low temperature limit.
The production of domestic hot water is controlled by the NAVISTEM B3100 using the QAZ 35 sensor in the tank.

Diagram: EVO S-4	page 3 / 8

E. CUSTOMER'S ELECTRICAL CONNECTION

POWER CONNECTION

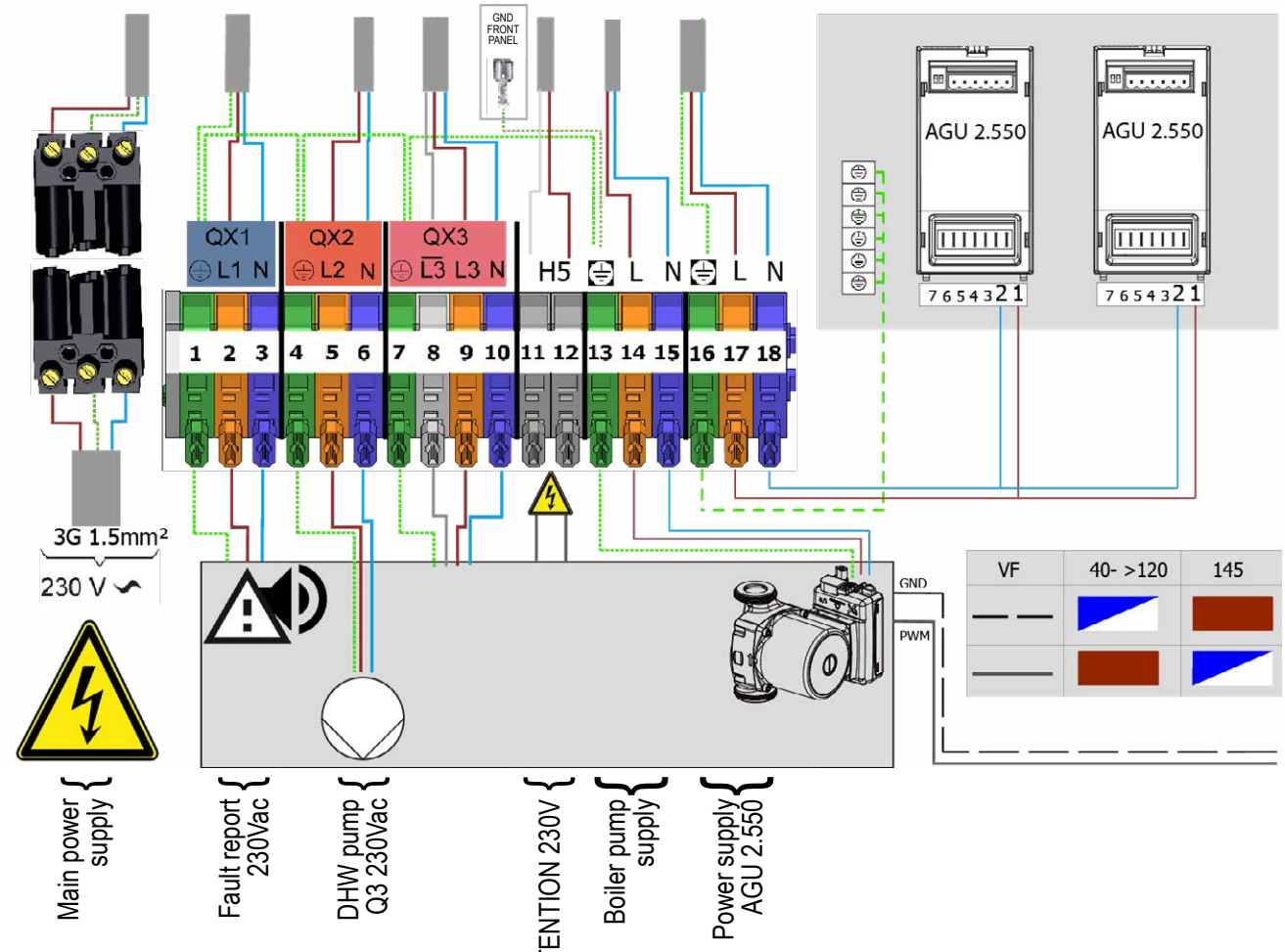

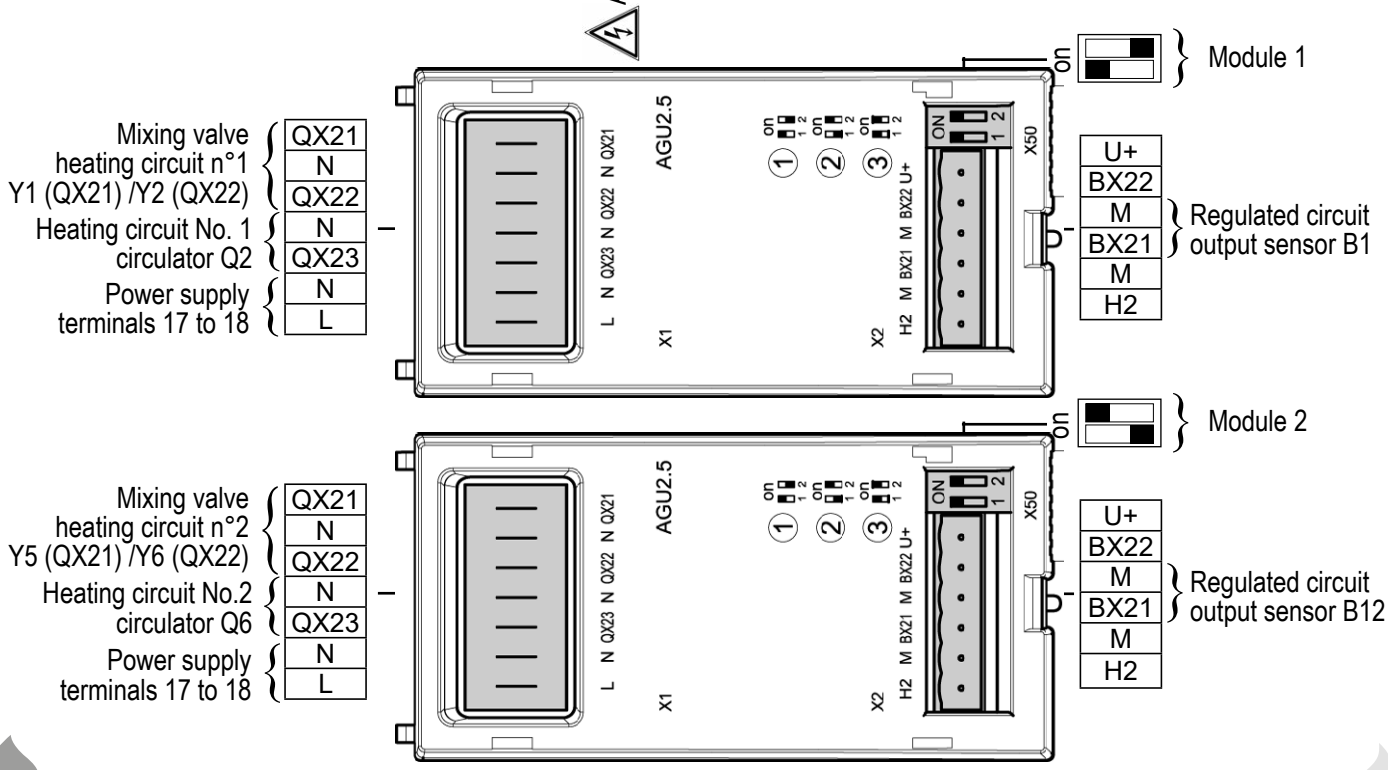

Diagram: EVO S-4

EVO S SIGNALS CONNECTION

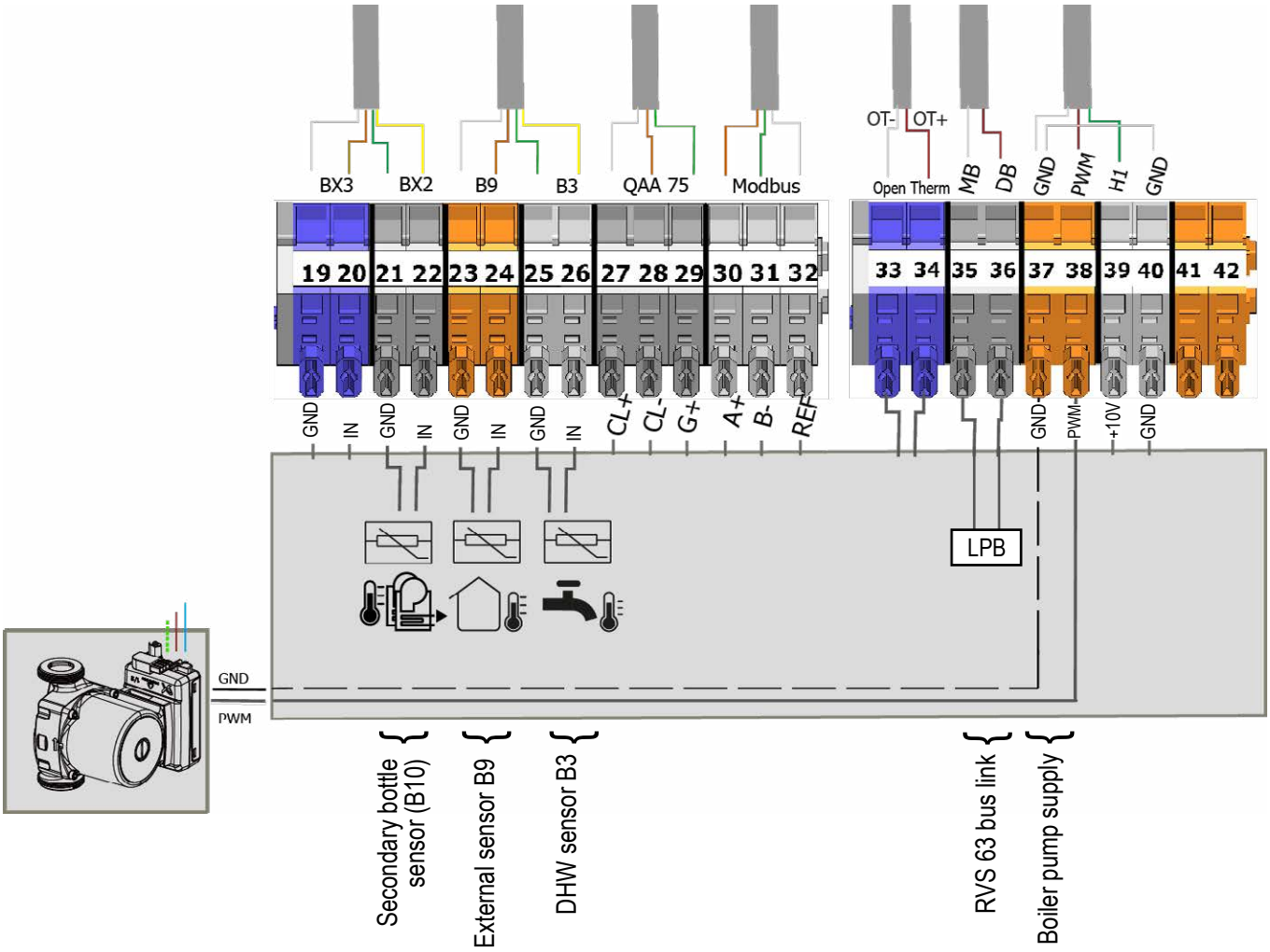

Diagram: EVO S-4

RVS 43 or RVS 63 regulator unit:

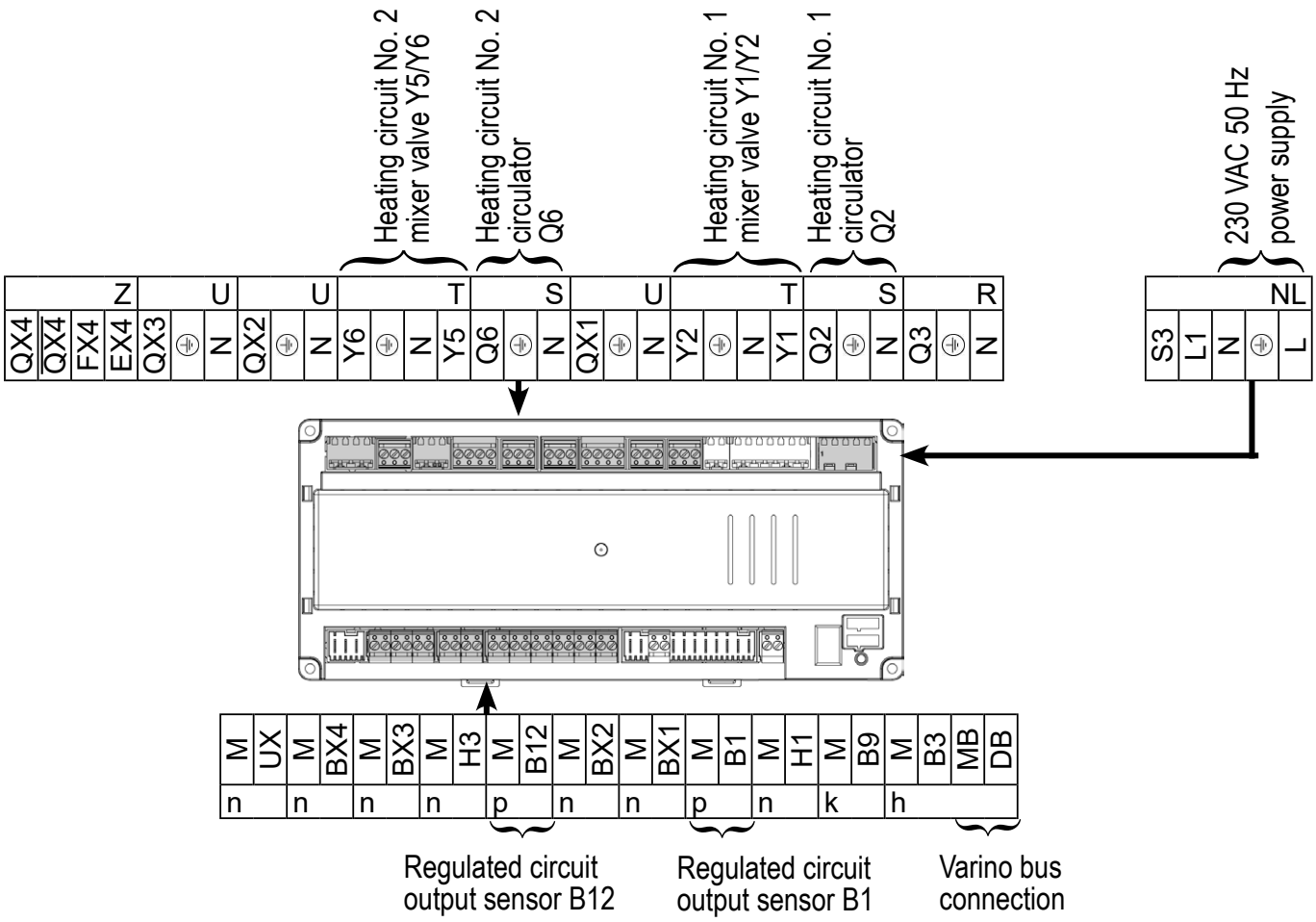

F. SPECIFIC START-UP PROCEDURE

☞ Correctly install and connect the electrical connections.

☞ Make the settings below in "specialist" mode:

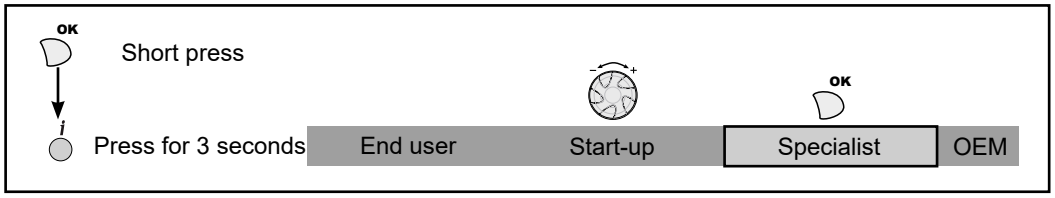

IMPORTANT: **configure the switches on the AGU 2.550 extension modules.**

On the boiler (Navistem B3100)

	Line No.	*Value*
• **Time and date *menu***		
Set the time	Hour / minute (1)	HH.MM
Set the date	Day / month (2)	DD.MM
Set the year	Year (3)	YYYY

Diagram: EVO S-4

	Line No.	Value
• Configuration *menu*		
Configure the secondary flow sensor	BX2 sensor input (5931)	B10 line output sensor
Start up heating circuit 1	Heating circuit 1 (5710)	Start
Start up heating circuit 2	Heating circuit 2 (5715)	Start
Configure the alarm output	Relay output QX1 (5890)	Alarm circuit K10
Configure the DHW tank pump output	Relay output QX2 (5891)	DHW pump Q3
Configure the extension modules	Extension module function 1 (6020)	Heating circuit 1
	Extension module function 2 (6021)	Heating circuit 2
Save the sensors so that they are taken into account by the system	Save sensor (6200)	Yes (switches back to no automatically)
• *LPB network menu*		
Configure the boiler so that the secondary sensor requests that the boiler flow setpoint is increased if the primary/secondary flows are not balanced	Cascade master (6630)	Permanent
Configure the cascade		
Address of the interface on the bus	Appliance address (6600)	1
Segment number	Segment address (6601)	0
Adjust the clock rate	Clock operation (6640)	Master
• Menu *Heating circuit 1/2*		
Adjust the comfort setting	Comfort setting temperature (710/1010)	---°C
Adjust the curve slope	Curve slope (720/1020)	---
Switch the heating regime to permanent comfort	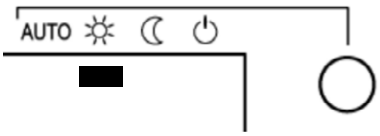	
• Domestic hot water *menu*		
Adjust the DHW setpoint	Comfort setting (1610)	---°C
Activate the DHW mode	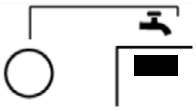	

Refer to the “ELECTRICAL VALIDATION” chapter for the regulator input/output tests

Diagram: EVO S-4

	Line No.	Value

Refer to the "OPTIMISATION" chapter for configuring the time slots for the heating and DHW circuits as well as for programming the anti-legionella cycles.

On the RVS 63:

☞ Correctly install and connect the electrical connections.

☞ Make the settings below in "specialist" mode:

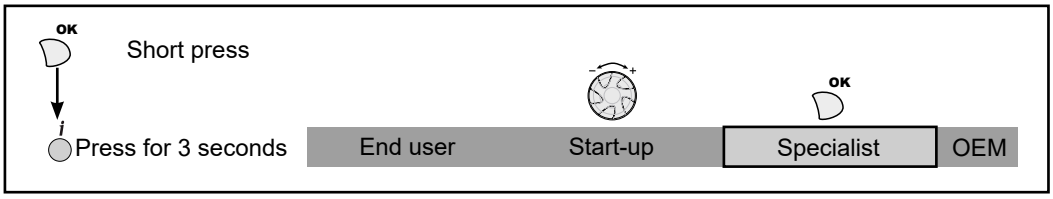

	Line No.	Value
• **Configuration *menu***		
Start up heating circuit 1	Heating circuit 1 (5710)	Start
Start up heating circuit 2	Heating circuit 2 (5715)	Start
Save the sensors so that they are taken into account by the system	Save sensor (6200)	Yes (switches back to no automatically)
• ***LPB network menu***		
Address of the interface on the bus	Appliance address (6600)	1
Segment number	Segment address (6601)	0
Adjust the clock rate	Clock operation (6640)	Slave without adjustment
• ***Heating circuit menu 1/2/3***		
Adjust the comfort setting	Comfort setpoint temperature (710/1010/1310)	---°C
Adjust the curve slope	Curve slope (720/1020/1320)	---
Adapt the setpoint	Summer/winter heating limit (730/1030/1330)	22 °C
Switching the function off	Daily heating limit (732/1032/1332)	---°C
Adapt the value	Boiler temperature over-value (830/1130/1430)	0 °C

Diagram: EVO S-4

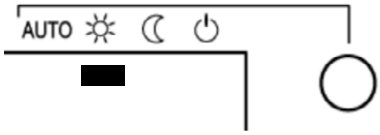

Switch the heating regime to permanent comfort

- **Domestic hot water *menu***

Adjust the DHW setpoint

Comfort setting (1610) | ---°C

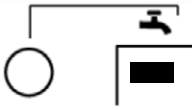

Activate the DHW mode

Refer to the “ELECTRICAL VALIDATION” chapter for the regulator input/output tests

Refer to the "OPTIMISATION" chapter for configuring the time slots for the heating and DHW circuits as well as for programming the anti-legionella cycles.

BOILER ONLY *1 non-regulated circuit with sliding flow*	Diagrams ***EVO S-20,*** page 1 / 4

A. HYDRAULIC DIAGRAM

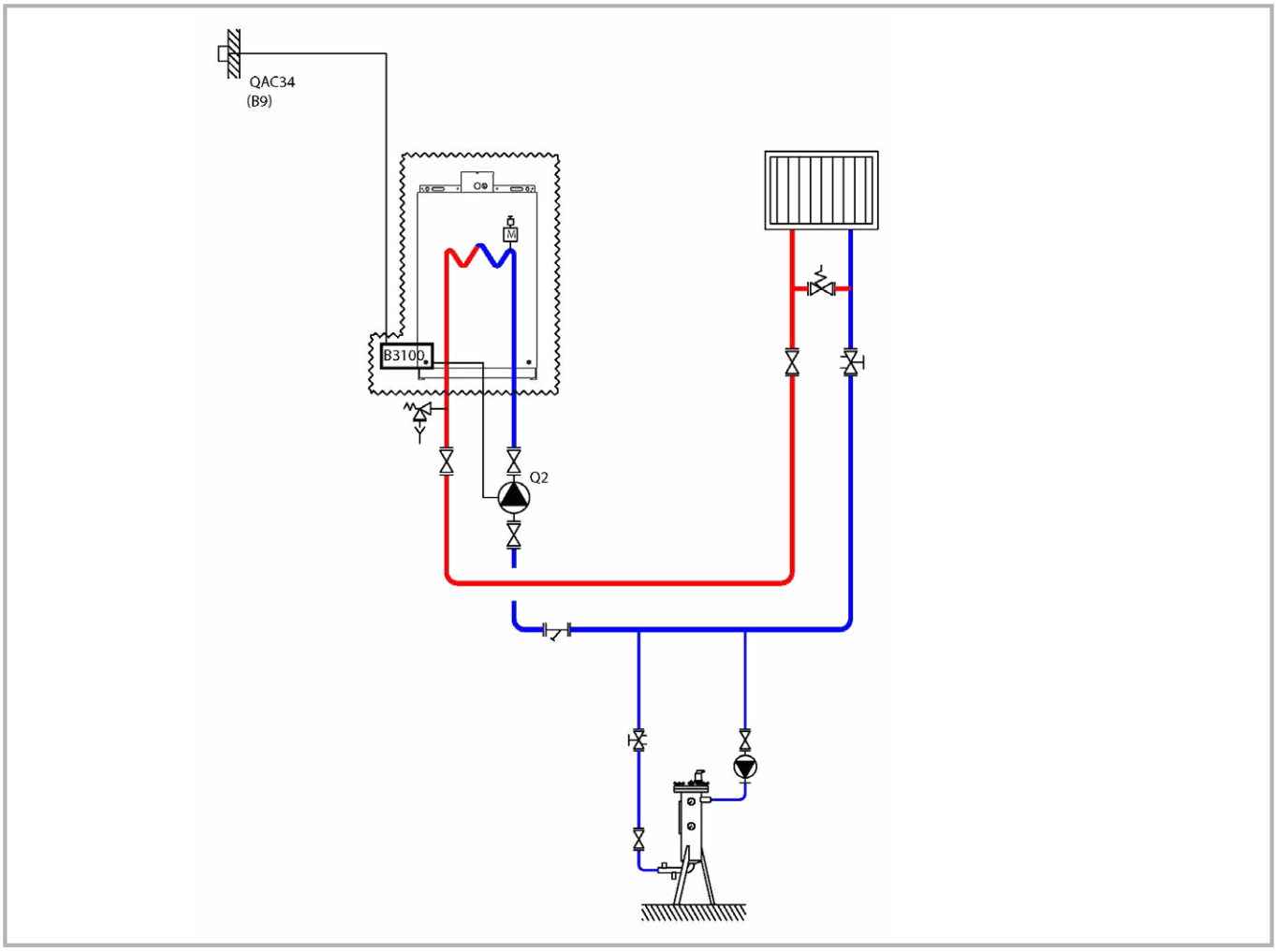

Figure 28 - EVO S-20 diagram

The boiler operates in variable flow temperature according to the outdoor temperature measured by the exterior sensor QAC 34.
The heating water law is programmed on the NAVISTEM B3100, with or without a low temperature limit and with a weekly programme.

The heating pump must be able to operate at a constant speed to ensure the minimum flow rate that is required by the generator.

If the installation is equipped with thermostatic taps on the emitters, the bypass between the outward and return lines of the network is essential. It is equipped with a differential valve that allows for the free flow of the heating pump when the thermostatic taps close.

Minimum flow

Model (kW)	**40**	**60**	**70**	**80**	**100**	**120**	**150**
Minimum flow (l/min)	9.5	19.2	19.2	38.3	38.3	50.0	57.3

Diagrams: EVO S-20	page 2 / 4

B. NECESSARY REGULATION ACCESSORY

	Quantity	Appliance reference
Outdoor sensor kit	1	QAC 34

Diagrams: EVO S-20	page 3 / 4

C. CUSTOMER'S ELECTRICAL CONNECTION

POWER CONNECTION

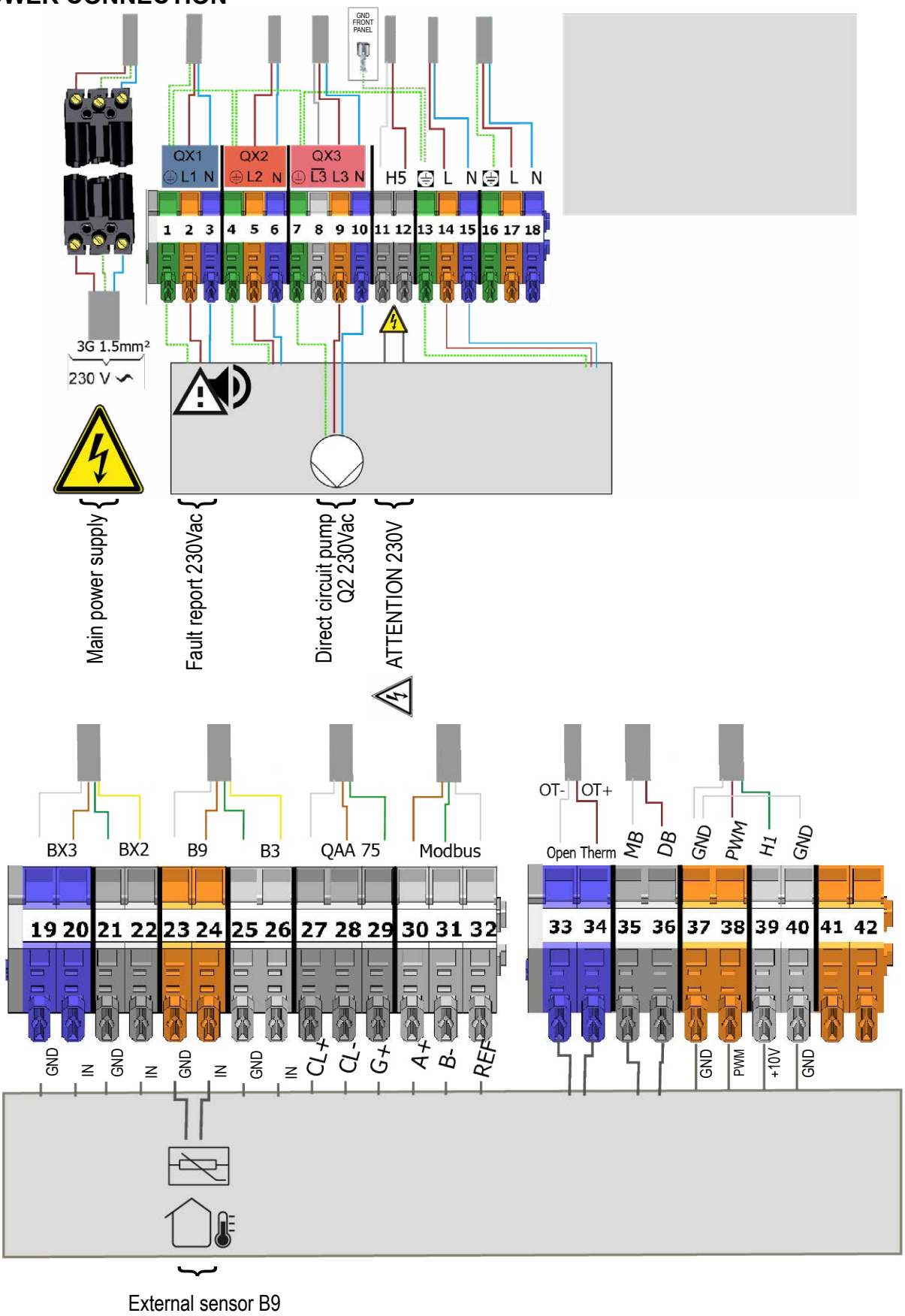

Diagrams: EVO S-20	page 4 / 4

D. SPECIFIC START-UP PROCEDURE

☞ Correctly install and connect the electrical connections.

☞ Make the settings below in "specialist" mode:

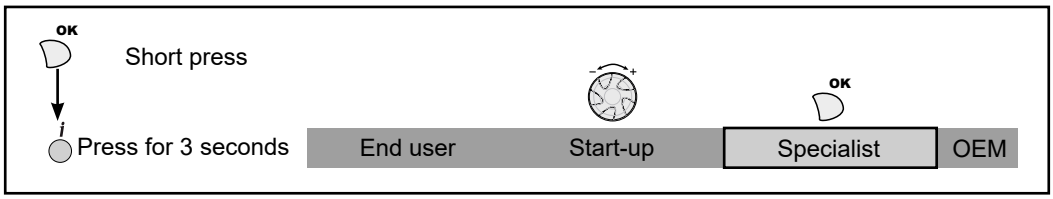

	Line No.	*Value*
• **Time and date *menu***		
Set the time	Hour / minute (1)	HH.MM
Set the date	Day / month (2)	DD.MM
Set the year	Year (3)	YYYY
• **Configuration *menu***		
Configure the secondary flow sensor	BX2 sensor input (5931)	B10 line output sensor
Start up heating circuit 1	Heating circuit 1 (5710)	Start
Configure the alarm output	Relay output QX1 (5890)	Alarm circuit K10
Configure the direct circuit pump Q2	Relay output QX3 (5892)	Pump CC1 Q2
Save the sensors so that they are taken into account by the system	Save sensor (6200)	Yes (switches back to no automatically)
• ***Heating circuit 1 menu***		
Adjust the comfort setting	Comfort setting temperature (710)	---°C
Adjust the curve slope	Curve slope (720)	---
Adjust the min. flow temperature for heating circuit 1	Minimum flow temperature setpoint (740)	60°C (adjust according to the lower limit)

Switch the heating regime to permanent comfort

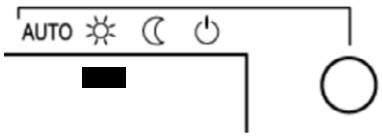

Refer to the “ELECTRICAL VALIDATION” chapter for the regulator input/output tests

Refer to the "OPTIMISATION" chapter for configuring the time slots for the heating and DHW circuits as well as for programming the anti-legionella cycles.

BOILER ONLY *DHW production with tank with coil*	Diagram ***EVO S-24*** page 1 / 3

A. HYDRAULIC DIAGRAM

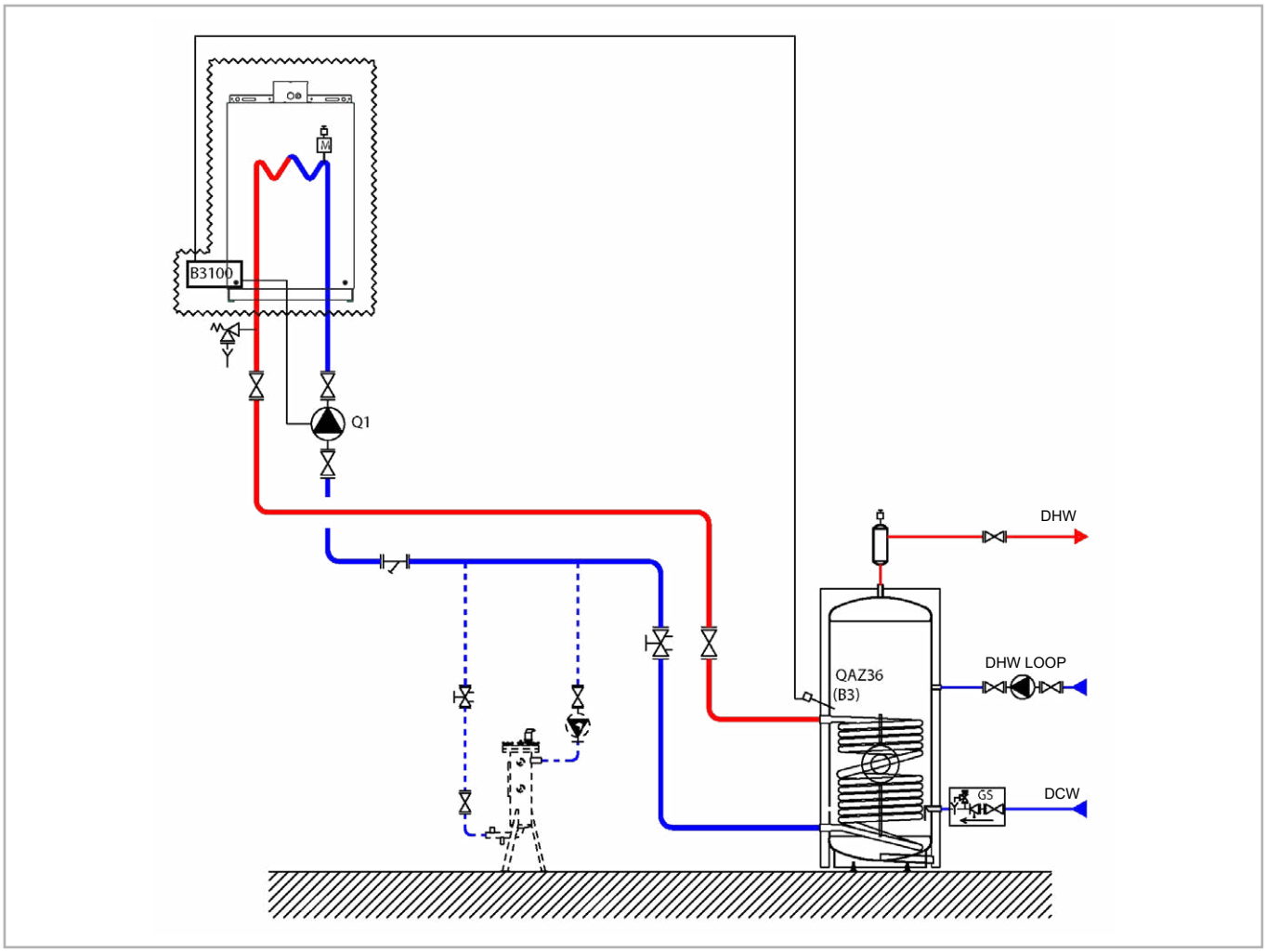

Figure 29 - EVO S-24 diagram

B. REQUIRED REGULATION ACCESSORY

	Quantity	Appliance reference
DHW sensor kit	1	QAZ 36

C. OPERATING DESCRIPTION

The boiler operates at the flow temperature required to produce the domestic hot water.
The heating pump must be able to operate at a constant speed to ensure the minimum flow rate that is required by the generator.
The domestic hot water production system has its own regulator.
A sensor QAZ 36, positioned inside the storage tank and connected to the generator, informs the boiler of the need for domestic hot water.

Minimum flow

Model (kW)	40	60	70	80	100	120	150
Minimum flow (l/min)	9.5	19.2	19.2	38.3	38.3	50.0	57.3

Diagram: EVO S-24	page 2 / 3

D. CUSTOMER'S ELECTRICAL CONNECTION

POWER CONNECTION

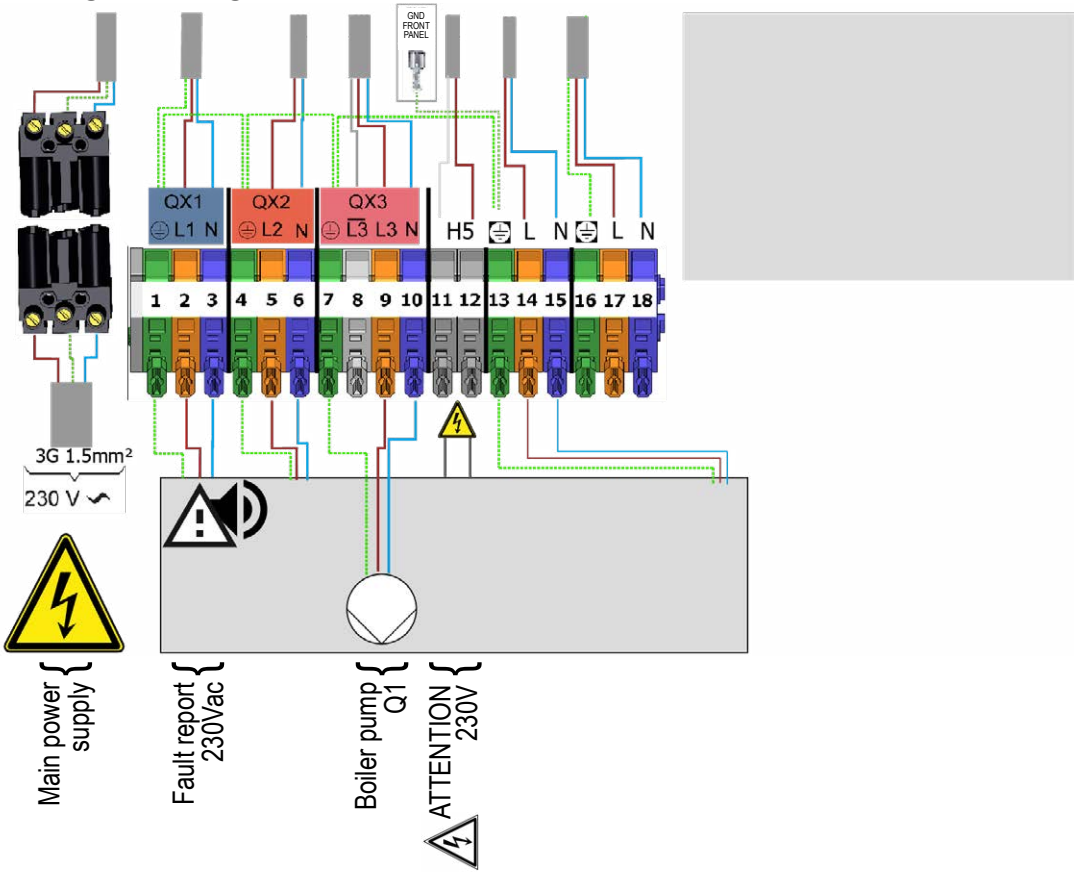

SIGNALS CONNECTION

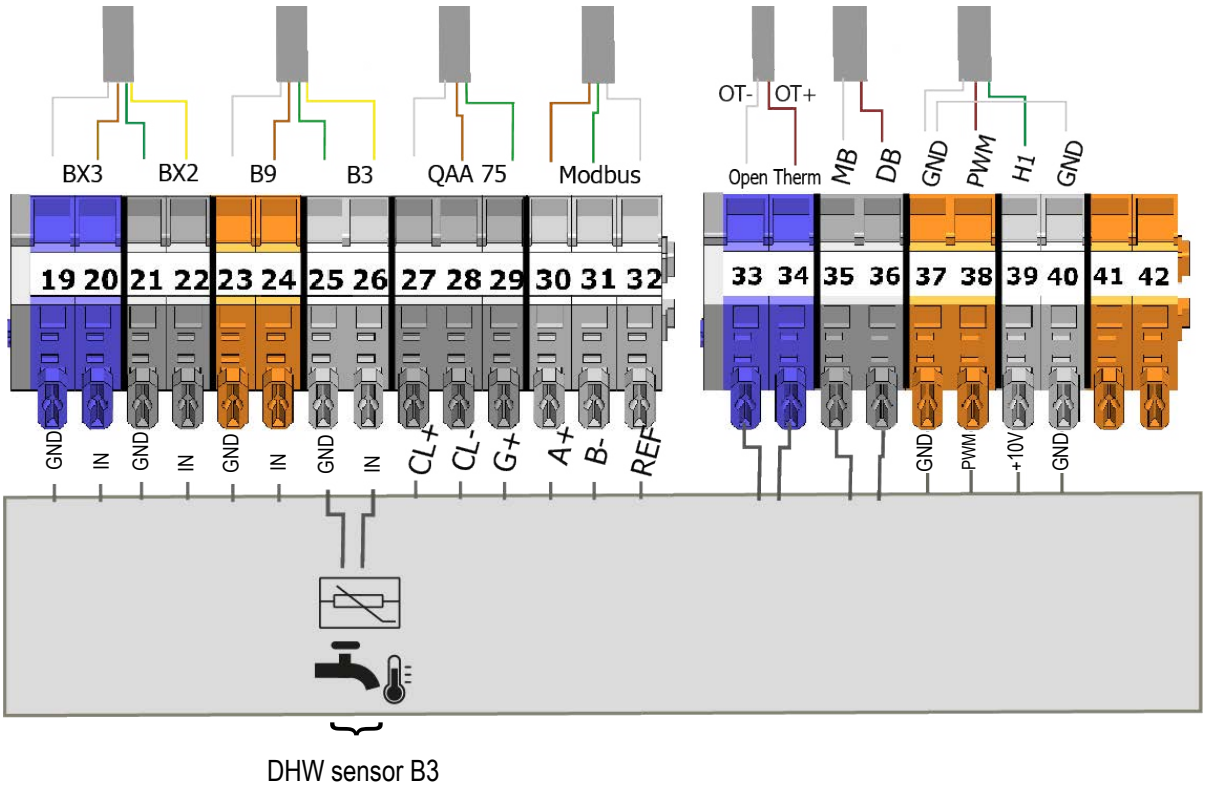

Diagram: EVO S-24	page 3 / 3

E. SPECIFIC START-UP PROCEDURE

☞ Correctly install and connect the electrical connections.

☞ Make the settings below in "specialist" mode:

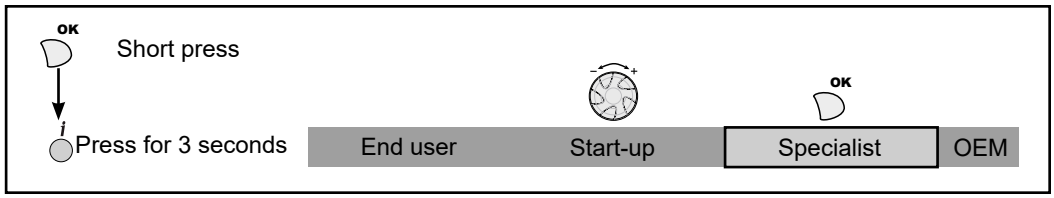

		Line No.	Value
• Time and date *menu*			
Set the time	Hour / minute	(1)	HH.MM
Set the date	Day / month	(2)	DD.MM
Set the year	Year	(3)	YYYY
• Configuration *menu*			
Configure the alarm output	Relay output QX1	(5890)	Alarm circuit K10
Configure the boiler pump	Relay output QX3	(5892)	Boiler pump Q1
Configure the DHW tank pump output so that the system can activate DHW mode. The Qx4 output cannot thus be used for any other functions.	Relay output QX4	(5894)	DHW pump Q3
Save the sensors so that they are taken into account by the system	Save sensor	(6200)	Yes (switches back to no automatically)
• Domestic hot water *menu*			
Adjust the DHW setpoint	Comfort setting	(1610)	---°C

Activate the DHW mode

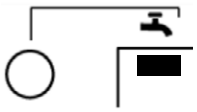

Refer to the "OPTIMISATION" chapter for configuring the time slots for the heating and DHW circuits as well as for programming the anti-legionella cycles.

CASCADED BOILERS *Without control of the secondary communications networks 0...10V or LPB*	Diagram ***EVO S-10*** page 1 / 7

A. HYDRAULIC DIAGRAM

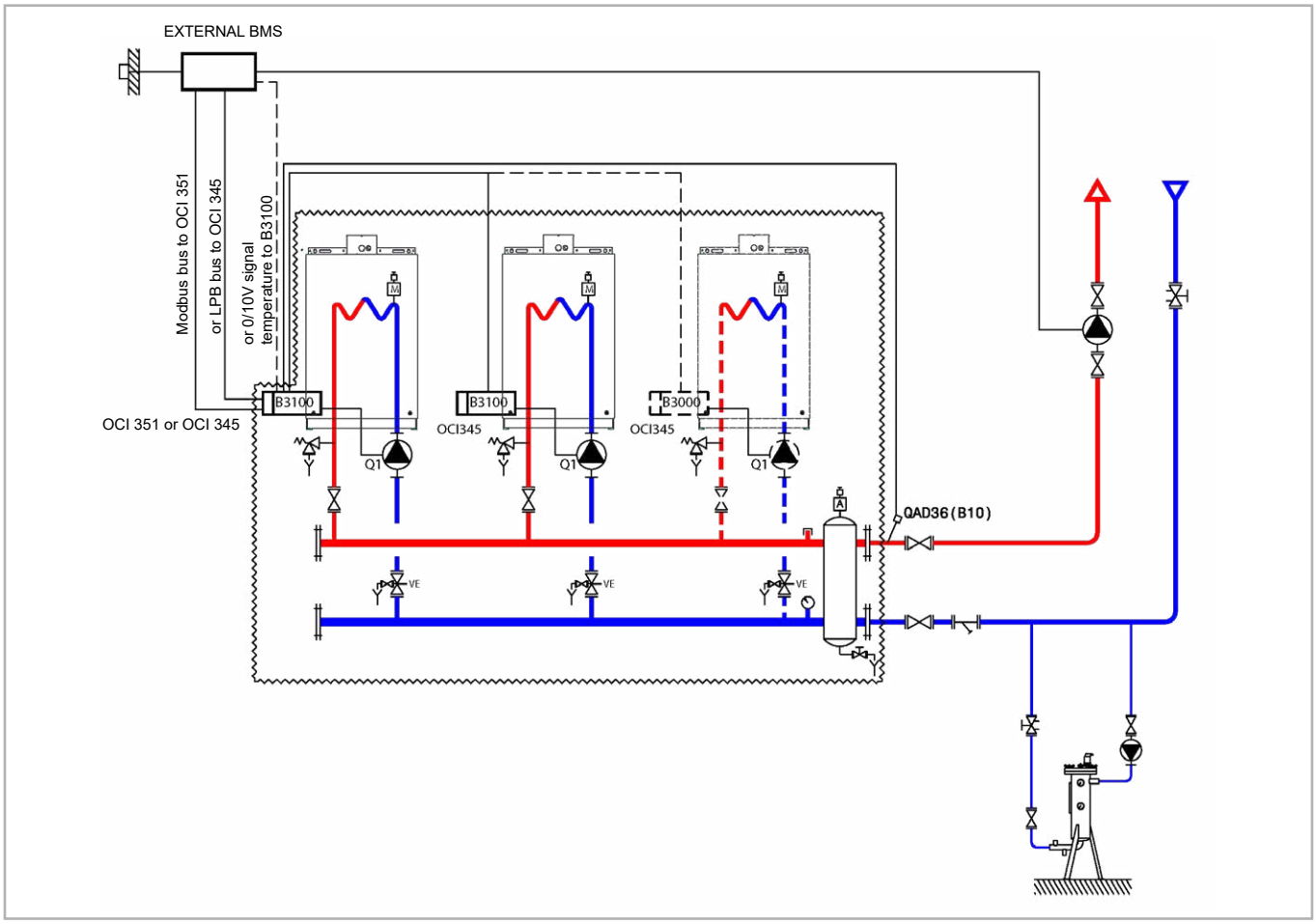

Figure 30 - EVO S-10 diagram

B. OPTIONAL ACCESSORIES

	Quantity	Appliance reference
Communication kit	2 (3)	OCI 345
Communication kit for Modbus bus (for dialogue via Modbus bus)	1	OCI 351
Network sensor kit	1	QAD 36

C. RECOMMENDED HYDRAULIC ACCESSORIES

We offer a wide range of hydraulic accessories, including support frame and header kits, and hydraulic separation options. Please refer to specific ACV literature for detailed information on these products.

Diagram: EVO S-10	page 2 / 7

D. OPERATING DESCRIPTION

The existing regulation controls all the circuits of the installation. It determines the outlet set point temperature that the installation requires and sends it to the boilers, either in a 0 - 10V signal directly to the NAVISTEM B3100 that is the master of the cascade, or over the LPB bus or Modbus to each NAVISTEM B3100.

The cascade of boilers is controlled by the installation's regulation system according to the needs.

The setpoint sent reflects the heating temperature that the installation needs at this precise moment.

E. CUSTOMER'S ELECTRICAL CONNECTION

Boiler 1

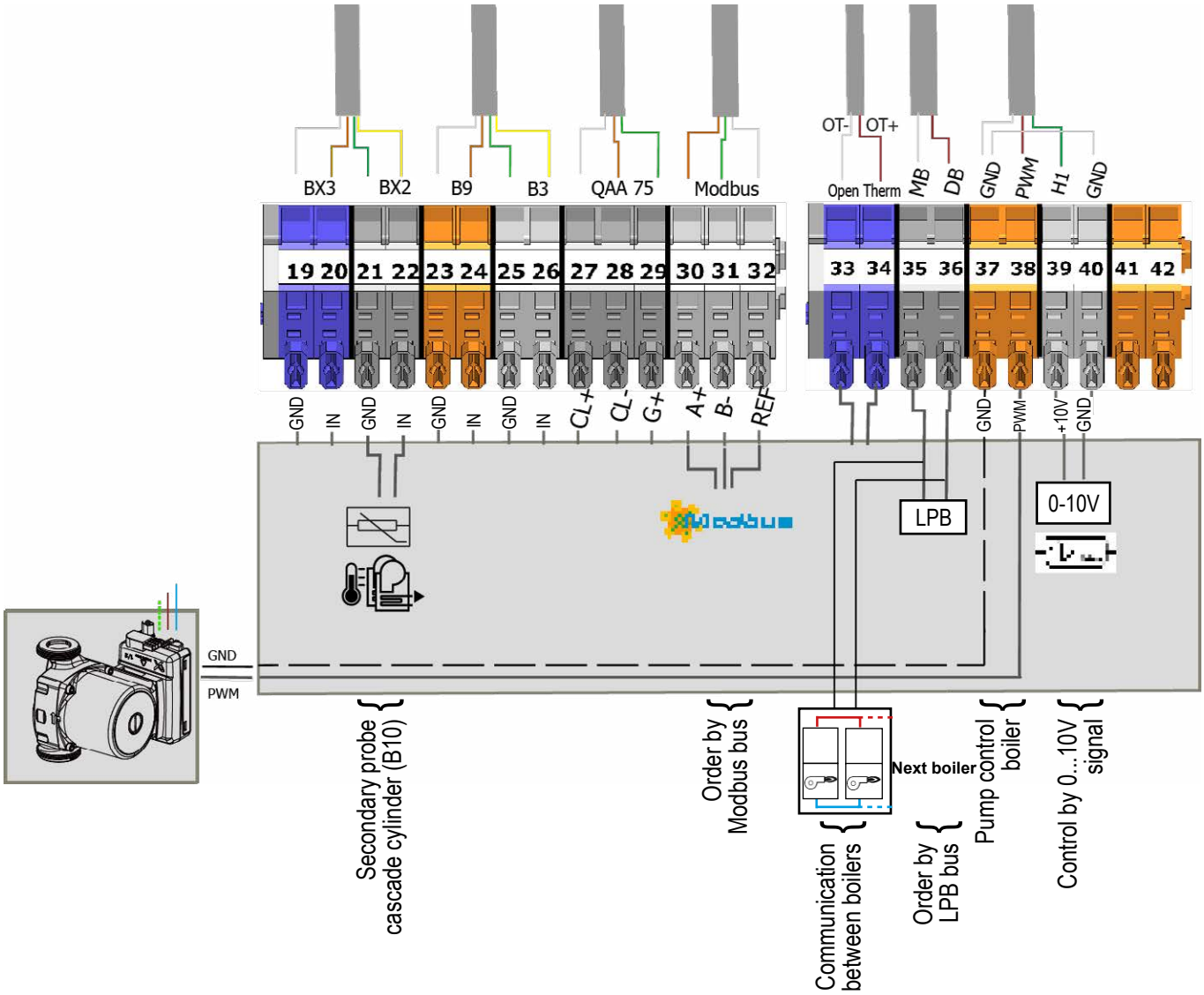

Diagram: EVO S-10

Boiler 2 and following

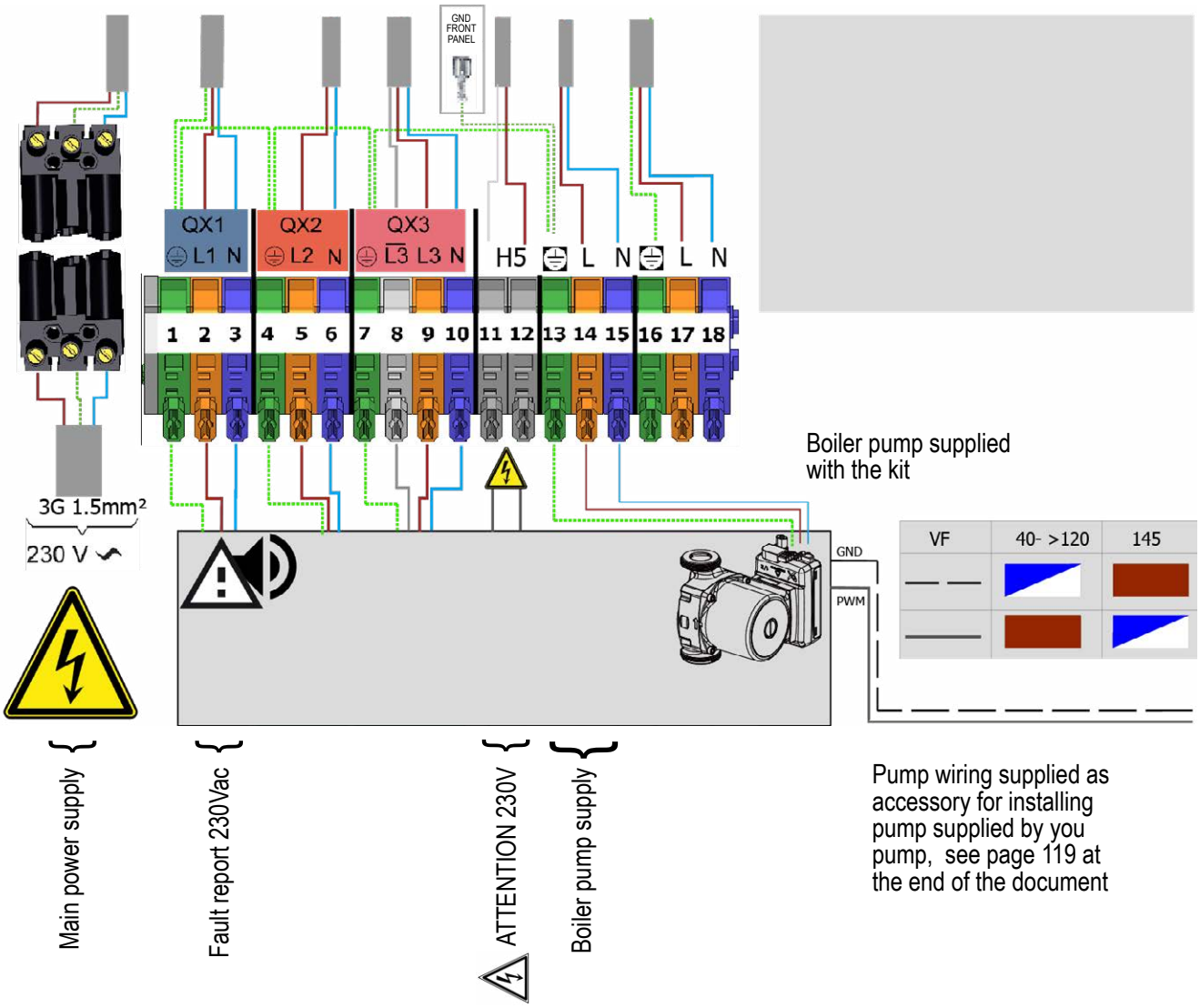

Diagram: EVO S-10

Boiler 2 and following

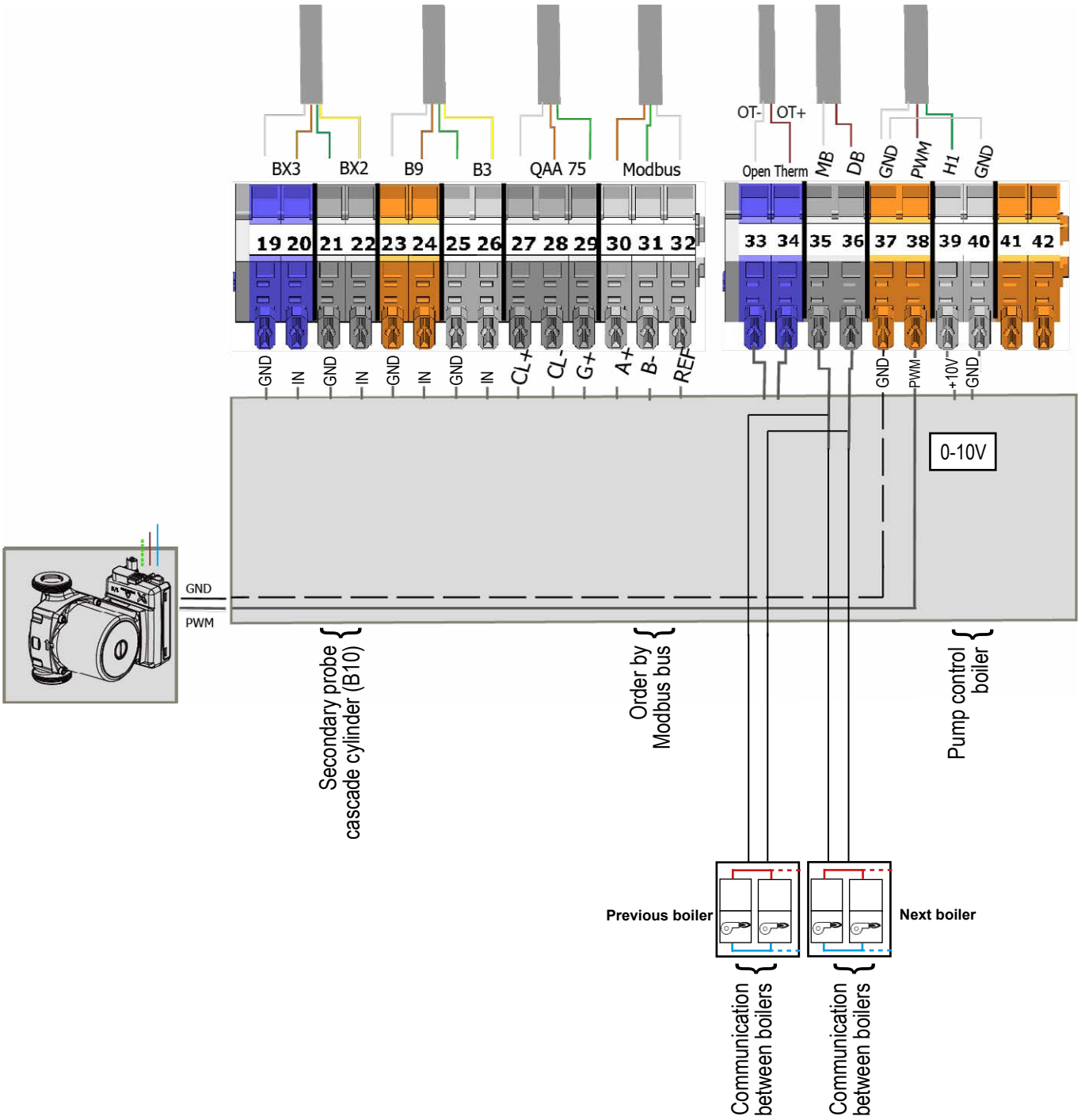

Diagram: EVO S-10

F. SPECIFIC START-UP PROCEDURE

☞ Correctly install and connect the electrical connections.

☞ Make the settings below in "specialist" mode:

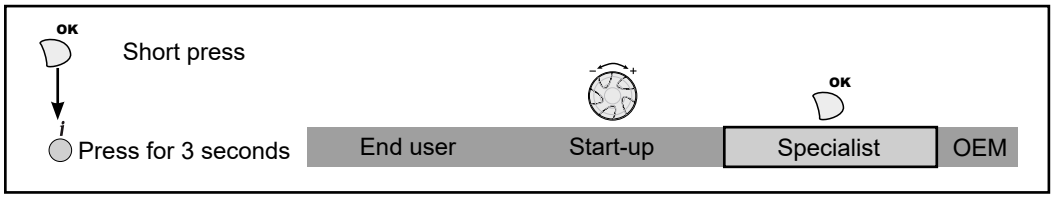

On boiler 1 (cascade master boiler)

	Line No.	*Value*
• **Time and date *menu***		
Set the time	Hour / minute (1)	HH.MM
Set the date	Day / month (2)	DD.MM
Set the year	Year (3)	YYYY

For a request via 0...10V input

• **Configuration *menu***

Configure the secondary flow sensor	Bx2 sensor input (5931)	B10 line output sensor
Configure the H1 input		
	H1 input function (5950)	10V consumption circ. request
	H1 voltage 1 value (5953)	0.0
	H1 function 1 value (5954)	0
	H1 voltage 2 value (5955)	10.0
	H1 function 2 value (5956)	1000 (for equivalence 10 V = 100 °C)
Save the sensors so that they are taken into account by the system	Save sensor (6200)	Yes (switches back to no automatically)

Attention the boiler considers a heat request for a H1 voltage > 0.2 V and a resulting setpoint > 6°C*.
The boiler no longer considers a heat request for a H1 voltage < 0.2V or a resulting setpoint < 4°C*.
In this second case, the boiler isolation valve will close. If the installation is not fitted with a hydraulic decoupling cylinder, all the network pumps must be stopped to prevent cavitation.
*: according to the scale entered in parameter 5956

• **Optional:** to keep the generator at a stop even if the 0...10V signal is different from 0

Configure the input that allows blocking	H5 input function (5977)	Inhibit starting (produces a fault E846)

Diagram: EVO S-10

	Line No.	Value

For a request via LPB

- **LPB network *menu***

  Check that the secondary regulatory is defined on an LPB segment other than 0 (reserved for the generators)

  Set the addresses and segments in your PLC that are shown in the following parameters

	Appliance address (6600)	1
	Segment address (6601)	0
	Bus supply function (6604)	Automatic
For your PLC to be the timestamp master	Clock operation (5955)	Master or Slave with adjustment if the PLC is the master clock

If you want an alarm report on this module (output K10 (QX1)) containing all the faults from all the modules

Alarm relay system messages (6611)	Yes

For a request via Modbus

- **Setup *menu***

  Configure input H1 :

Function input H1 (5950)	Consumer circuit request 1
Contact action direction (5951)	Work

- **Modbus *menu***

  In the boiler's Modbus elements, set the

Slave address (6651)	As it is set on your PLC
Baud rate (6652)	As it is set on your PLC
Parity (6653)	As it is set on your PLC
Stop bit (6654)	As it is set on your PLC

The Modbus register for sending the boiler flow temperature setpoint

Modbus address		Line No.	No. register	Data	Access		Possible values	Data type	Coefficient
Decimal	Hexa	B3100			Read.	Writ.			
13313	3401	1859	1	Consumer departure instruction 1 dry contact	✓	✓	8... 120,°C	U16	1/64

Diagram: EVO S-10

On Boiler 2 and following

- **LPB network *menu***

  Set the addresses and segments from the following settings in your PLC

	Line No.	*Value*
	Appliance address (6600)	1
	Segment address (6601)	0
For your PLC to be the timestamp master	Clock operation (5955)	Slave without adjustment

CAUTION:

- **Connect the bus between the boilers (pay attention to the polarity).**
- **Switch off, then switch on the slave boiler(s). If the communication has been correctly established, the clock is updated correctly.**

CASCADED BOILERS
2 regulated circuits per boiler and production of DHW

Diagram
EVO S-11
page 1 / 7

A. HYDRAULIC DIAGRAM

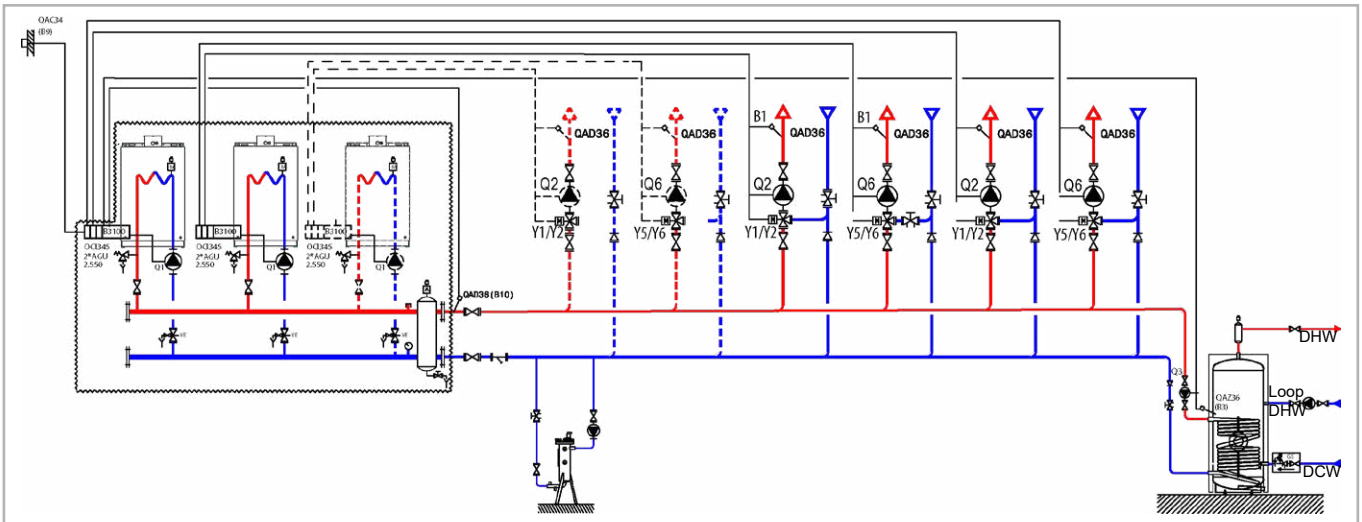

Figure 31 - EVO S-11 diagram

B. OPTIONAL ACCESSORIES

	Quantity	Appliance reference
Communication kit for LPB bus	2 (3)	OCI 345
Extension module kit (delivered with a QAD36 network sensor)	4 (6)	AGU 2.550
DHW sensor kit	1	QAZ 36
Outdoor sensor kit	1	QAC 34
Network sensor kit	1	QAD 36

C. RECOMMENDED HYDRAULIC ACCESSORIES

We offer a wide range of hydraulic accessories, including support frame and header kits, and hydraulic separation options. Please refer to specific ACV literature for detailed information on these products.

D. OPERATING DESCRIPTION

The master NAVISTEM B3100 controls the cascade of boilers on the basis of the outlet temperature measured by the sensor QAD 36. Each NAVISTEM B3100 controls the charge pump of its own generator.
The boilers operate with a variable outlet temperature according to the outdoor temperature measured by the sensor QAC 34, temperature adjusted according to the most demanding circuit, without parallel offset, without a low temperature limit and with a weekly programme.
The heating programme is per week. Each AGU 2.550 module controls a regulated circuit with a 3-way valve.

Diagram: EVO S-11	page 2 / 7

E. CUSTOMER'S ELECTRICAL CONNECTION

Boiler 1

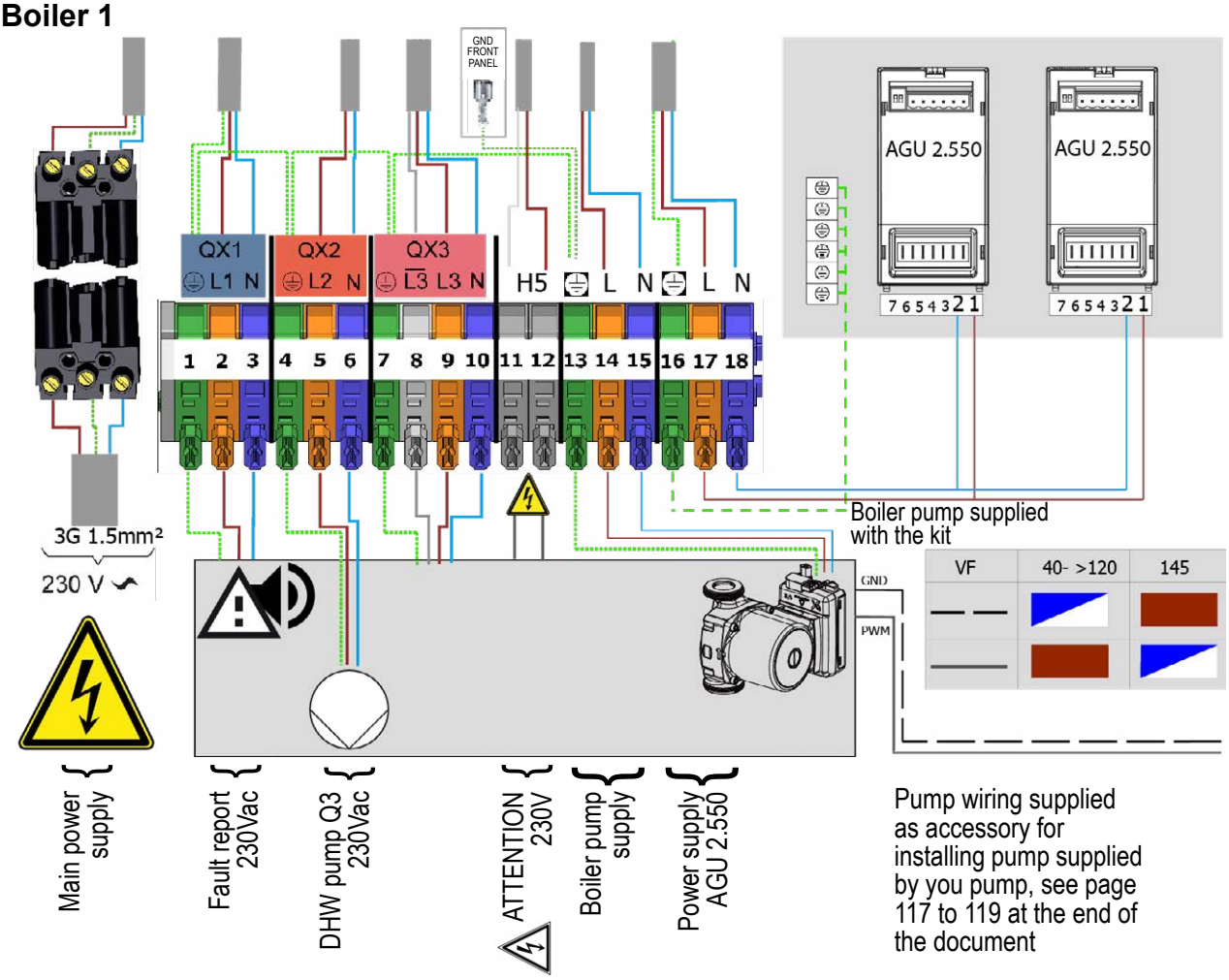

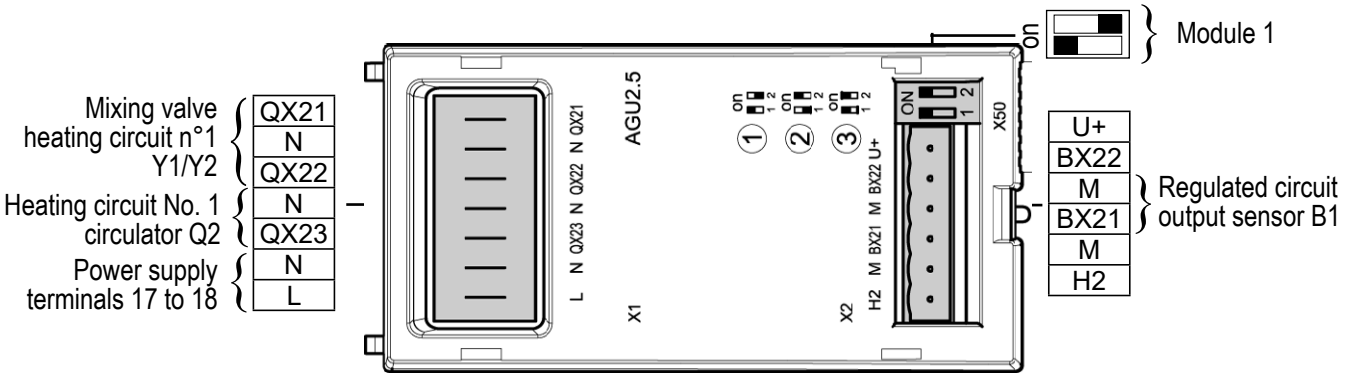

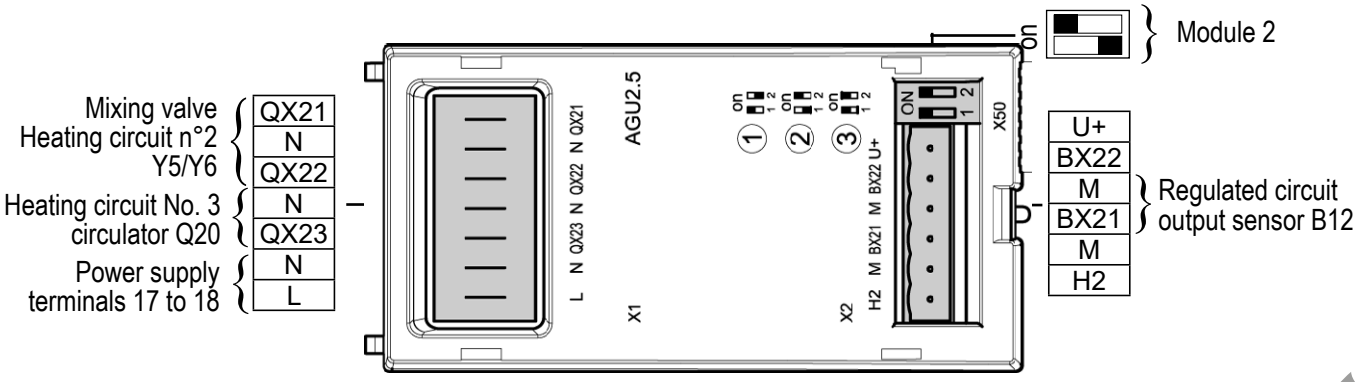

Diagram: EVO S-11	page 2 / 7

Boiler 2 and following

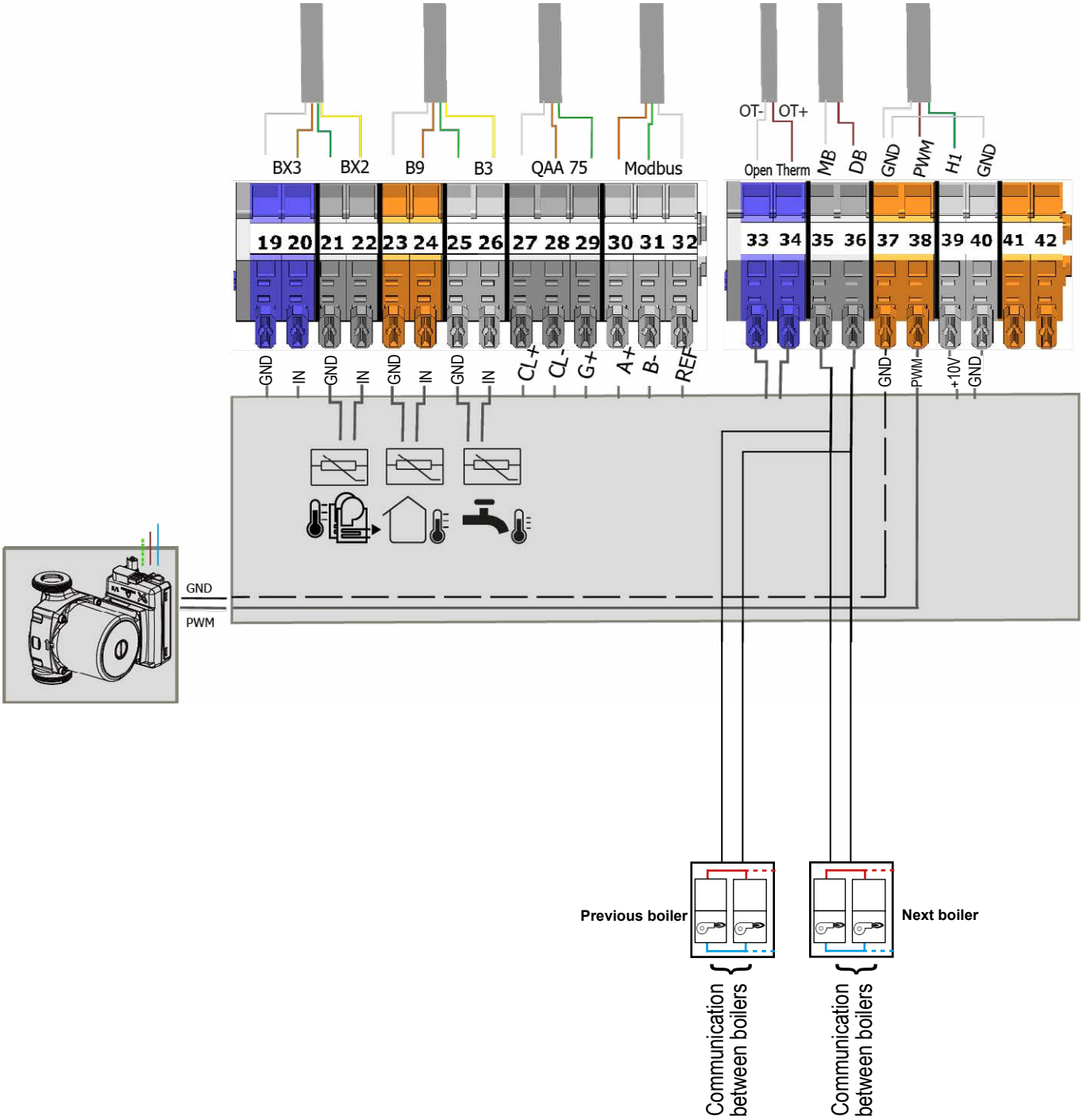

Diagram: EVO S-11	page 2 / 7

E. SPECIFIC START-UP PROCEDURE

☞ Correctly install and connect the electrical connections.

☞ Make the settings below in "specialist" mode:

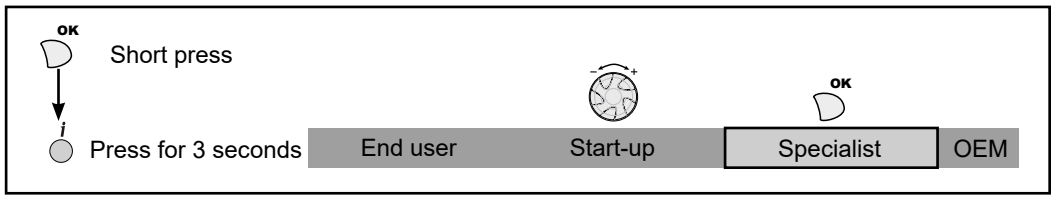

On boiler 1 (cascade master boiler)

	Line No.	*Value*
• **Time and date *menu***		
Set the time	Hour / minute (1)	HH.MM
Set the date	Day / month (2)	DD.MM
Set the year	Year (3)	YYYY
• **Configuration *menu***		
Configure the secondary flow sensor	BX2 sensor input (5931)	B10 line output sensor
Start up heating circuit 1	Heating circuit 1 (5710)	Start
Start up heating circuit 2	Heating circuit 1 (5715)	Start
Configure the alarm output	Relay output QX1 (5890)	Alarm circuit K10
Configure DHW pump Q3	Relay output QX2 (5891)	Valve/DHW pump Q3
Configure the extension module 1	Extension module function 1 (6020)	Heating circuit 1
Configure the extension module 2	Extension module function 2 (6022)	Heating circuit 2
Save the sensors so that they are taken into account by the system	Save sensor (6200)	Yes (switches back to no automatically)
• ***LPB network menu: Configure as master of the cascade***		
Number of the appliance	Appliance address (6600)	1
Segment number	Segment address (6601)	0
Adjust the clock rate	Clock operation (6640)	Master
• **Menu *Heating circuit 1/2***		
Adjust the comfort setting	Comfort setting temperature (710/1010)	---°C
Adjust the curve slope	Curve slope (720/1020)	---
Switch the heating regime to permanent comfort		

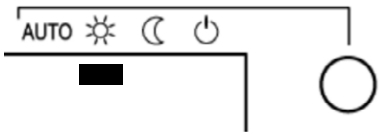

Diagram: EVO S-11

	Line No.	Value
• Domestic hot water *menu*		
Adjust the DHW setpoint	Comfort setting (1610)	---°C
Activate the DHW mode	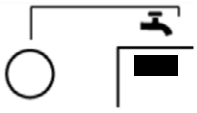	

<u>On boiler 2 and following (cascade slave boiler)</u>

• Configuration *menu*		
Start up heating circuit 1	Heating circuit 1 (5710)	Start
Start up heating circuit 2	Heating circuit 2 (5715)	Start
Configure the alarm output	Relay output QX1 (5890)	Alarm circuit K10
Configure the extension module 1	Extension module function 1 (6020)	Heating circuit 1
Configure the extension module 2	Extension module function 2 (6022)	Heating circuit 2
Save the sensors so that they are taken into account by the system	Save sensor (6200)	Yes (switches back to no automatically)
• Menu *LPB network: Configure as master of the cascade*		
Number of the appliance	Appliance address (6600)	2 (or following for other cascades)
Segment number	Segment address (6601)	0
Adjust the clock rate	Clock operation (6640)	Master
If you want an alarm report on this module (output K10 (QX1)) containing all the faults from all the modules	Display system messages (6611)	Yes
• *Cheating circuit menu 1/2*		
Adjust the comfort setting	Comfort setting temperature (710/1010)	---°C
Adjust the curve slope	Curve slope (720/1020)	---
Switch the heating regime to permanent comfort	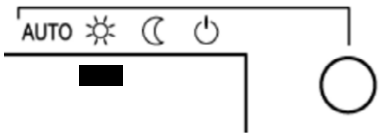	

Refer to the “ELECTRICAL VALIDATION” chapter for the regulator input/output tests

ELECTRICAL VALIDATION

- **Menu *Input/output tests***

	Line No.	Value
Check the sensor values		
Outdoor T° B9	External T° B9 (7730)	---°C
DHW sensor B3	T° ECS B3 (7750)	---°C
BX2 sensor (cascade or secondary B10 cylinder flow)	T° sensor BX2 (7821)	---°C
BX3 sensor	Temp. sensor BX3 (7822)	---°C
BX21 sensor module 1 (output sensor CC1, B1)	T° sensor BX21 mod.1 (7830)	---°C
BX22 sensor module 1	T° sensor BX22 mod.1 (7831)	---°C
BX21 sensor module 2 (output sensor CC1, B1)	T° sensor BX21 mod.2 (7832)	---°C
BX22 sensor module 2	T° sensor BX22 mod.2 (7833)	---°C
H1 voltage signal (T° control via external 0-10V request)		
	H1 voltage signal (7840)	---V
	H1 contact status (7841)	Open / closed
Contact status H2, module 1 (CC mode change switching)		
	Contact status H2, module 1 (7846)	Open / closed
	Contact status H5 (7865)	Open / closed
230Vac outputs test		
Alarm output	Relay test (7700)	Output QX1
Programmable output QX2 (DHW pump)	Relay test (7700)	Output QX2
Programmable output QX3 (Q2 direct circuit pump)	Relay test (7700)	Output QX3
Programmable output QX21 module 1 (CC1 V3V opening)	Relay test (7700)	Output QX21 Module 1
Programmable output QX21 module 2 (CC2 V3V opening)	Relay test (7700)	Output QX21 Module 2
Programmable output QX22 module 1 (CC1 V3V closing)	Relay test (7700)	Output QX22 Module 1
Programmable output QX22 module 2 (CC2 V3V closing)	Relay test (7700)	Output QX22 Module 2
Programmable output QX23 module 1 (CC1 pump)	Relay test (7700)	Output QX23 Module 1
Programmable output QX23 module 1 (CC2 pump)	Relay test (7700)	Output QX23 Module 2
Cancel enable	Relay test (7700)	No test
Analogue output test for controlling the variable-speed boiler pump		
Boiler pump speed control output	P1 output test (7713)	0 to 100%

HEATING CIRCUIT OPTIMISATION

Reduce setpoints for time ranges

	Line No.	Value
• **Menu *Heating circuit (1 or 2 or 3)***		
Adjust the reduced setpoint for CH1	Reduced setpoint T° (712)	...°C
Adjust the reduced setpoint for CC2	Reduced setpoint T° (1012)	...°C
Adjust the reduced setpoint for CC3	Reduced setpoint T° (1312)	...°C

• **Menu *Timer program CC1 or CC2 or CC3***		
Preselection for CC1/CC2/CC3	Preselection (500/520/540)	Monday - Sunday
Adjust the timer programming for CC1/CC2/CC3	1st Phase ON (501/521/541)	00:00 h
Adjust the timer programming for CC1/CC2/CC3	1st Phase OFF (502/522/542)	06:00 h
Adjust the timer programming for CC1/CC2/CC3	2nd Phase ON (503/523/543)	22:00 h
Adjust the timer programming for CC1/CC2/CC3	2nd Phase OFF (504/524/544)	24:00 h

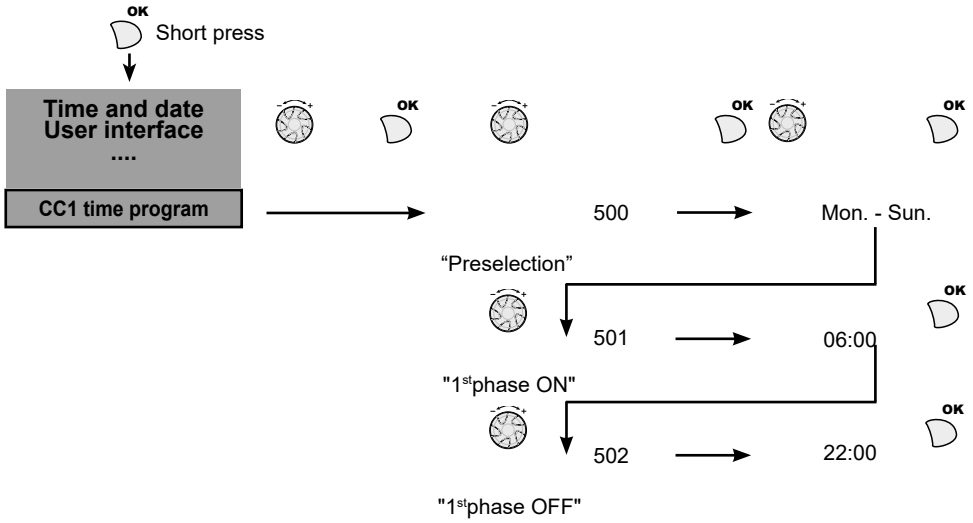

Put the heating circuits on standby if the temperature outside is elevated

	Line No.	Value
• **Menu *Heating circuit (1 or 2 or 3)***		
ECO function for automatic summer / winter switch (activated by default). See Navistem B3100 manual		
for CC1	Summer/winter heating limit CC1 (712)	19 °C
for CC2	Summer/winter heating limit CC2 (1012)	19 °C
for CC3	Summer/winter heating limit CC3 (1312)	19 °C

OPTIMISATION

	Line No.	Value

- **Menu *Heating circuit (1 or 2 or 3)***

Daily ECO function for automatic comfort / reduced switch according to the difference between the set point and the outdoor temperature (Deactivated by default).
See Navistem B3100 manual

for CC1	Daily heating limit CC1 (732)	0 °C
for CC2	Daily heating limit CC2 (1032)	0 °C
for CC3	Daily heating limit CC3 (1332)	0 °C

Programming known absences during the year

	Line No.	Value

- **Menu *Holidays CC1/CC2/CC3***

Preselection for CC1	Preselection (641/651/661)	Monday - Sunday
Adjust the timer programming for CC2	Preselection (642/652/662)	days: months
Adjust the timer programming for CC3	Preselection (643/653/663)	days: months

HEATING CIRCUIT OPTIMISATION

	Line No.	Value

- **Menu *Heating circuit 1 / 2***

Adjust the reduced mode setting	Reduced setpoint T° (712/1012)	...°C

ECO function for automatic summer / winter switch (see NAVISTEM B3100 manual)

Summer/winter heating limit (730/1030)	19 °C

Daily ECO function for automatic comfort / reduced switch according to the difference between the set point and the outdoor temperature (see NAVISTEM B3100 manual).

Daily heating limit (732/1032)	0 °C

- **Menu *Timer program CC1 / CC2***

Preselection of the day or range	Preselection (500/520)	---
Adjust the timer programming	On/Off phase (501...506)	---
	(521...526)	---

OPTIMISATION

Time range setting path

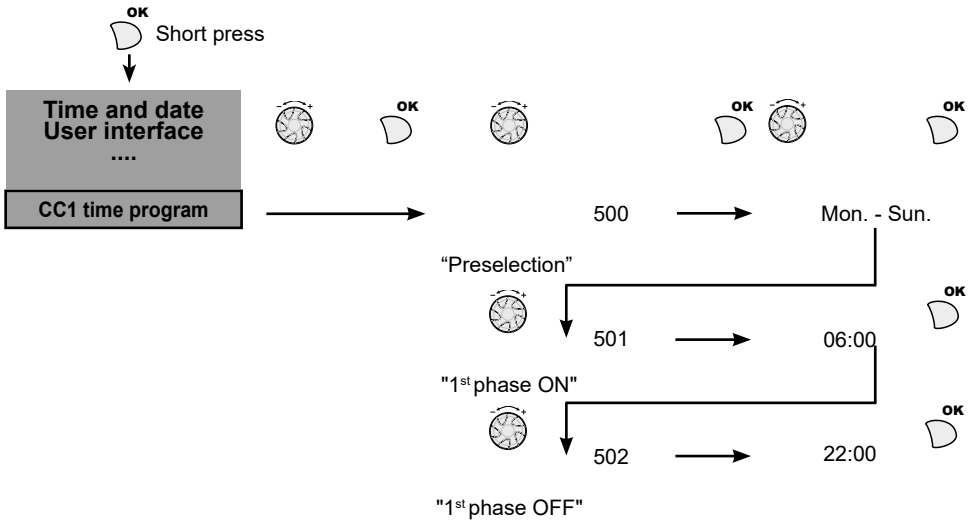

- **Menu *Holidays CC1 / CC2***

Preselection of the day or range

	Line No.	Value
Preselection	(641/651)	---
On/Off phase	(642.643)	---
	(652.653)	---

Switch the heating regime to automatic

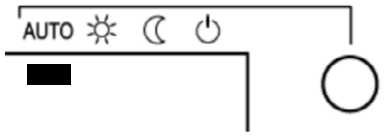

If you have more than one heating circuit activated on the boiler proceed as follows

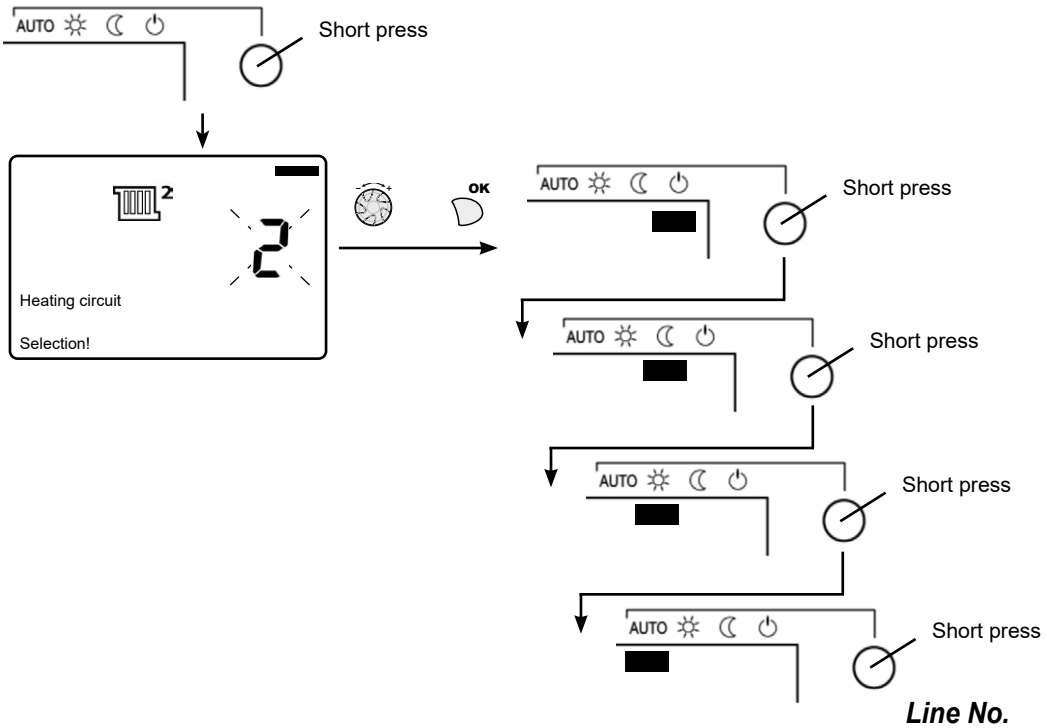

- **Configuration *menu***

Activate the heating circuits' frost protection mode

	Line No.	Value
Installation frost protection	(6120)	Start

DHW CIRCUIT OPTIMISATION

	Line No.	Value
• **DHW tank *menu***		
Adjust the over value	Start setpoint T° over-value (5020)	16 °C
• **Configuration *menu***		
Activate the heating circuits' frost protection mode	Installation frost protection (6120)	on
Setting the anti-legionella cycle (if desired)		
• **Domestic hot water *menu***		
Activate anti-legionella mode	Anti-legionella function (1640)	stop / periodic / fixed day of the week
Choice of repetition. From daily to every 7 days. 1641 = periodic		
	Periodical anti-legionella function (1641)	1 to 7 days
Choice of day of the week if 1641 = fixed weekday		
	Legionella function day week (1642)	Monday...Sunday
Anti-legionella launch time	Times of anti-legionella operation (1644)	00:00
Heating T° setpoint for anti-legionella function	Anti-legionella setpoint (1645)	As needed (°C)
Anti-legionella T° holding time	Anti-legionella function duration (1646)	As needed (min)

Optimisation: EVO S 22	page 1 / 2

OPTIMISATION OF DHW PRODUCTION

Boiler settings

	Line No.	Value
• **Configuration *menu***		
Adjust the parameter	Relay output QX4 (5893)	Pp/valve ECS Q3
• **Consumer circuit 1 *menu***		
Set the constant flow setpoint	Cons 1 request output setting (1859)	67 °C *
* (depends on the dimensioning on the DHW preparation unit)		
Remove pump stoppage on DHW priority	DHW priority (1874)	No
• **Domestic hot water *menu***		
Adjust the comfort setting	Comfort setting (1610)	60 °C (depends on the setting of the DHW preparation unit)
Adjust the DHW release mode	DHW release (1620)	24/24
• **DHW tank menu**		
Over-value of the boiler outlet temperature when the DHW is restarted	Outlet setpoint T° raise (5020)	16 °C

Adjustment on an ACV Rubis W3000 or Rubis EVO W3100 preparation unit without a savings and performance kit:

<u>Parameters menu / DHW production / Main setpoint (C1):</u>

C1 setpoint: 62 °C

Summary of the rules for DHW set point adjustment on the EVO S

Setpoint of consuming circuit 1 (1859) = setpoint C1 Rubis + 5°C = 67°C

DHW setpoint (1610) = setpoint C1 rubis - 2°C = 60°C

Boiler setpoint temperature over-value (5020) = 16 °C

Process description

The consumer circuit keeps the tank temperature at 67°C.In this case, the boiler setpoint = consumer circuit setpoint (67°C).If the sensor inside the tank detects a temperature < 55 °C, being the DHW setpoint (60°C) - differential (5°C)= 55°C, the DHW cycle is started. The boiler setpoint is then = the DHW setpoint (60°C) + over-value (16°C) = 76°C.

The DHW cycle stops when the sensor inside the tank reaches the DHW setpoint temperature (60°C). The boiler then returns to the setpoint of the consuming circuit (67°).

Activate the DHW mode 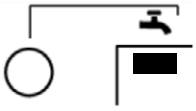

Optimisation: EVO S 23	page 2 / 2

OPTIMISATION OF DHW PRODUCTION

Boiler settings

	Line No.	Value
• **Configuration *menu***		
Adjust the parameter	Relay output QX4 (5893)	Pp/valve ECS Q3
• **Consumer circuit *1 menu***		
Set the constant flow setpoint	Cons 1 request output setting (1859)	68 °C *
* (depends on the dimensioning on the DHW preparation unit)		
Remove pump stoppage on DHW priority	DHW priority (1874)	No
• **Domestic hot water *menu***		
Adjust the comfort setting	Comfort setting (1610)	58°C (depends on the setting on the DHW preparation unit)
Adjust the DHW release mode	DHW release (1620)	24/24
• **DHW tank menu**		
Over-value of the boiler outlet temperature when the DHW is restarted		
	Outlet setpoint T° raise (5020)	16 °C

Adjustment on an ACV Rubis W3000 or Rubis EVO W3100 preparation unit without a savings and performance kit:

<u>Parameters menu / DHW production / Main setpoint (C1):</u>

C1 setpoint: 58 °C

Summary of the rules for DHW set point adjustment on the EVO S

Setpoint of consuming circuit 1 (1859) = setpoint C1 Rubis + 10°C = 68°C

DHW setpoint (1610) = setpoint C1 rubis - 2°C = 58°C

Boiler setpoint temperature over-value (5020) = 16 °C

Process description

The consumer circuit maintains the tank temperature at 68°C. In this case, the boiler setpoint = consumer circuit setpoint (68°C).

If the sensor inside the tank detects a temperature = the set point of the DHW (58°C), the DHW cycle starts. The output temperature of the boiler is then =

the set point of the DHW (58°C) + over-value (16°C) = 74°C.

The DHW cycle stops when the sensor inside the tank reaches the DHW set point temperature (60°C). The boiler then returns to the setpoint of the consuming circuit (68°).

Activate the DHW mode 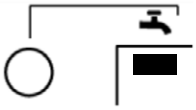

BOILER PUMP NOT FROM ACV

If you choose to install a pump you supply yourself, it can be On/Off or analogue controlled (0-10V)

Case of a supplied pump controlled by an On/Off signal

Connect the boiler directly to output Qx3 if consumption is <1A, otherwise use a relay to interface.

If the pump has an On/Off control switch, it is best to control with a relay switch connected to output Qx3

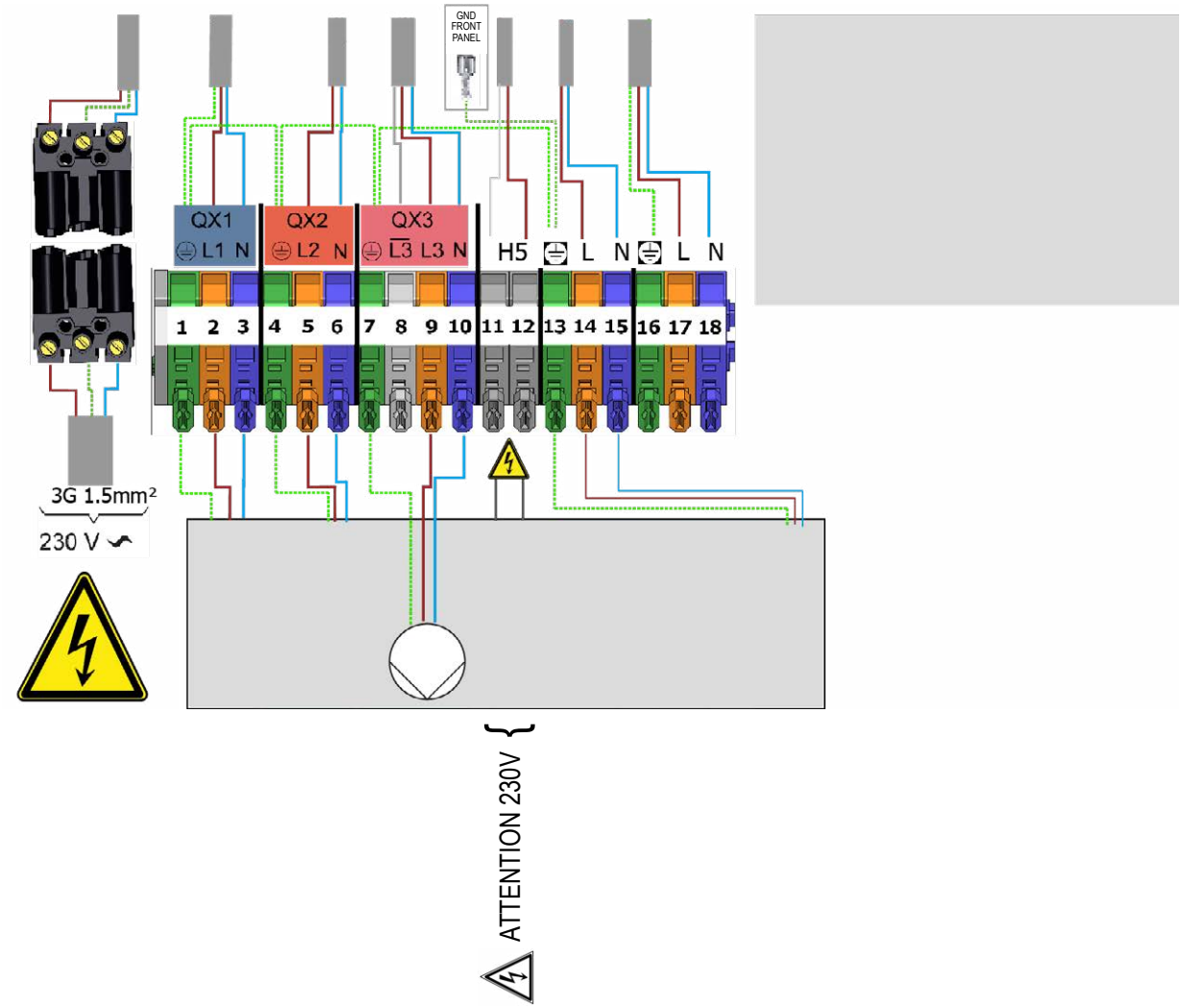

Settings on the Navistem B3100

	Line No.	*Value*
• **Configuration *menu***		
Activate the output to control the boiler pump	Relay output QX3 (5892)	Boiler pump Q1

BOILER PUMP NOT FROM ACV

Case of a supplied pump controlled by a 0-10V signal

Connect the pump power supply to terminals 13/14/15 if consumption is <1A, otherwise connect the power supply to the customer's electrical cabinet.
The kit (AGU2.551) should be purchased for implementing 0-10V signal control
To guarantee the temperature at the secondary, it is advisable to place a sensor after the mixing bottle, the kit reference and its implementation is described below.

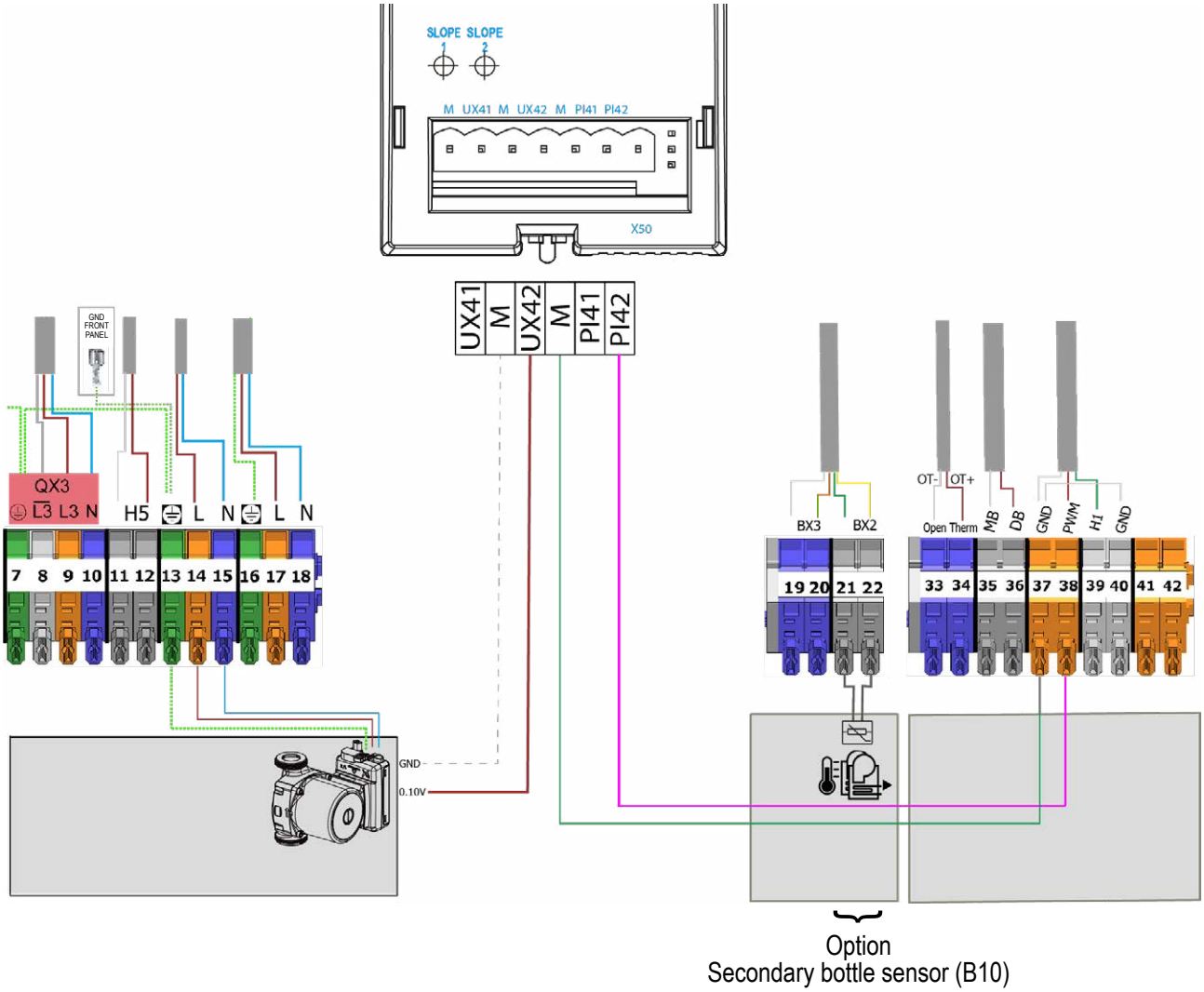

Control accessory required

	Quantity	Device reference	Order N°
Mains probe kit	1	QAD 36	059592

Settings on the Navistem B3100

	No line	*Value*
• ***Setup*** **Menu**		
Configure the secondary flow sensor (optional)	Sensor input BX2 (5931)	line flow sensor B10
• ***Boiler*** **Menu**		
Set the minimum rotation speed of the pump	Speed rot. min. pump (2322)	---%
Set the maximum rotation speed of the pump	Speed rot. maxi. pump (2323)	---%

BOILER PUMP NOT FROM ACV

Use the following settings to determine the values of the previous section's parameters by respecting the data presented in the summary table of the flow rates below:

Model (kW)	40	60	70	80	100	120	150
Min. flow (l/min)	9.5	19.2	19.2	38.3	38.3	50.0	57.3
2322 (%) with our circulator kits	34	42	35	40	40	42	54
Max. flow (l/min)	28.7	39.3	50.0	57.3	71.7	86.0	103.8
2323 (%) with our circulator kits	74	78	78	75	77	74	92

Follow steps 1 and 2 to find the minimum flow command and repeat these same steps to set the maximum flow command.

Step 1

Line No. ***Value***

- **Menu *Input/output tests***

  Define the control value in % to control the boiler pump speed. The 0-100% scale roughly corresponds to the 0-10V control scale.

  Request via manual control — Test output P1 (7713) | ---% (0 to 100%)

  For example, if the pump from the kit is used for a 70kw boiler, the value to be entered here would be 35%.

Step 2

Line No. ***Value***

- ***Generator diagnostics*** menu

  Check that the water flow in the boiler is as expected

  Reading the boiler water flow — Boiler flow (8366) | --- (l/min)

  For example, for a 70 kW boiler, the value to be shown here is 19.2 l/min (+/-0.2 l/min).

  If the flow rate for your model does not match what is shown in the above table, please reset a speed control beginning from step 1.

10. SPARE PARTS LIST

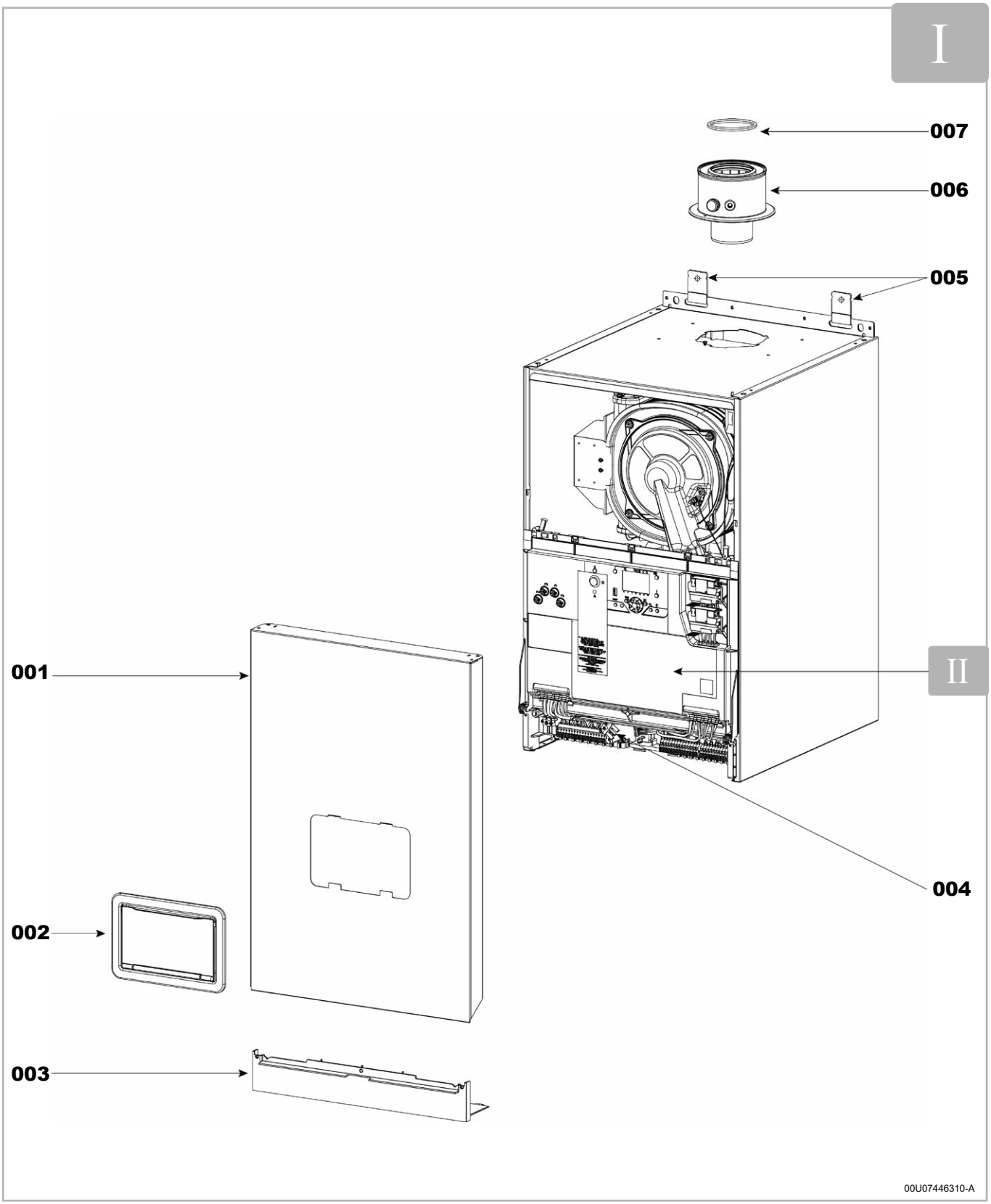

Figure 32 - EVO S casing

ITEM	DESCRIPTION	MODELS						
		40	60	70	80	100	120	150
001	Front jacket	200316			200317			
002	Complete user interface flap	78703						
003	Grey front panel	200323						
004	Power plug	200110						
005	Wall fixing hook	200246						
006	Concentric adaptor	200305			200306			
007	Flue adaptater gasket D80/D100 interior	200307			200308			
--	Front Jacket fasteners	200320						
--	Front jacket complete fixing system	200321						

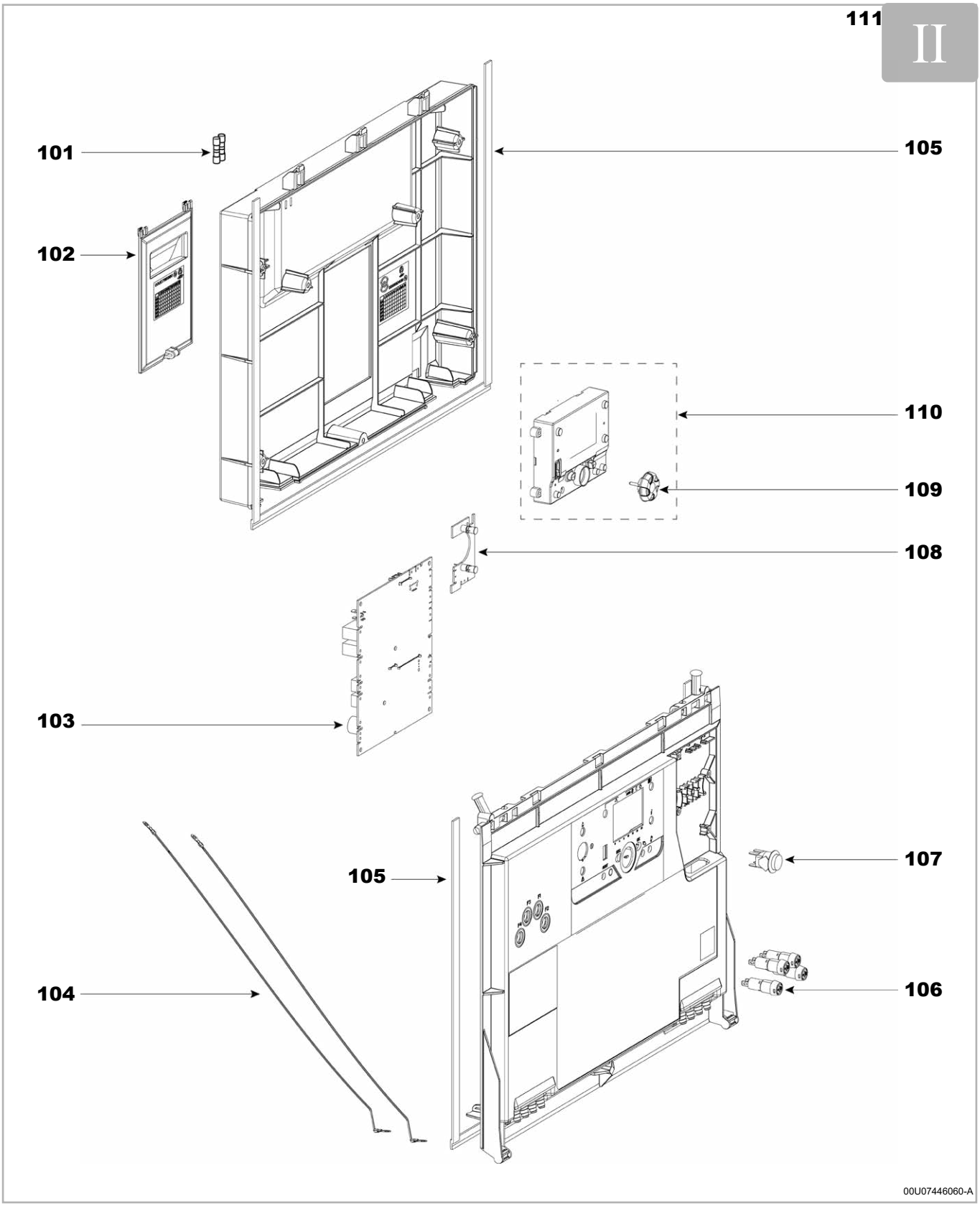

Figure 33 - Control panel

ITEM	DESCRIPTION	MODELS						
		40	60	70	80	100	120	150
101	Fuse (T 6.3 H - 5x20)	71898						
102	Plastic hatch	200140						
103	LMS Mini 6.4	200122	200123	200127	200129	200131	200135	200136
104	Lanyard	200141						
105	Adhesive seal	200142						
106	Round fuse holder	200139						
107	Switch	76134						
108	LED board + LED ribbon cable + LED cover	200143						
109	Selector	76135						
110	Display alone (user interface) with selector	78477						
111	Complete control panel	200112	200113	200115	200116	200117	200119	200120
--	Display cover	200109						
--	Complete electrical cabinet	76523						
--	Customer power supply connector	76148						
--	Customer Signal wiring	200144						
--	Customer Power wiring	200146						
--	Internal Signal wiring	200147			200149			
--	Internal Power wiring	200148			200150			
--	OCI 345 ribbon cable	200151						
--	OCI 351 ribbon cable	200297						
--	EMC filter housing wiring	200152						
--	Display wiring	200153						
--	Boiler power cable	200302						
--	Gas valve cable	200154		76628				200155
--	Electrode ignition cable	73150						
--	Fan remote control wiring	200156	--					
--	Fan adapter wiring							76630
--	AGU bus wiring	200298						

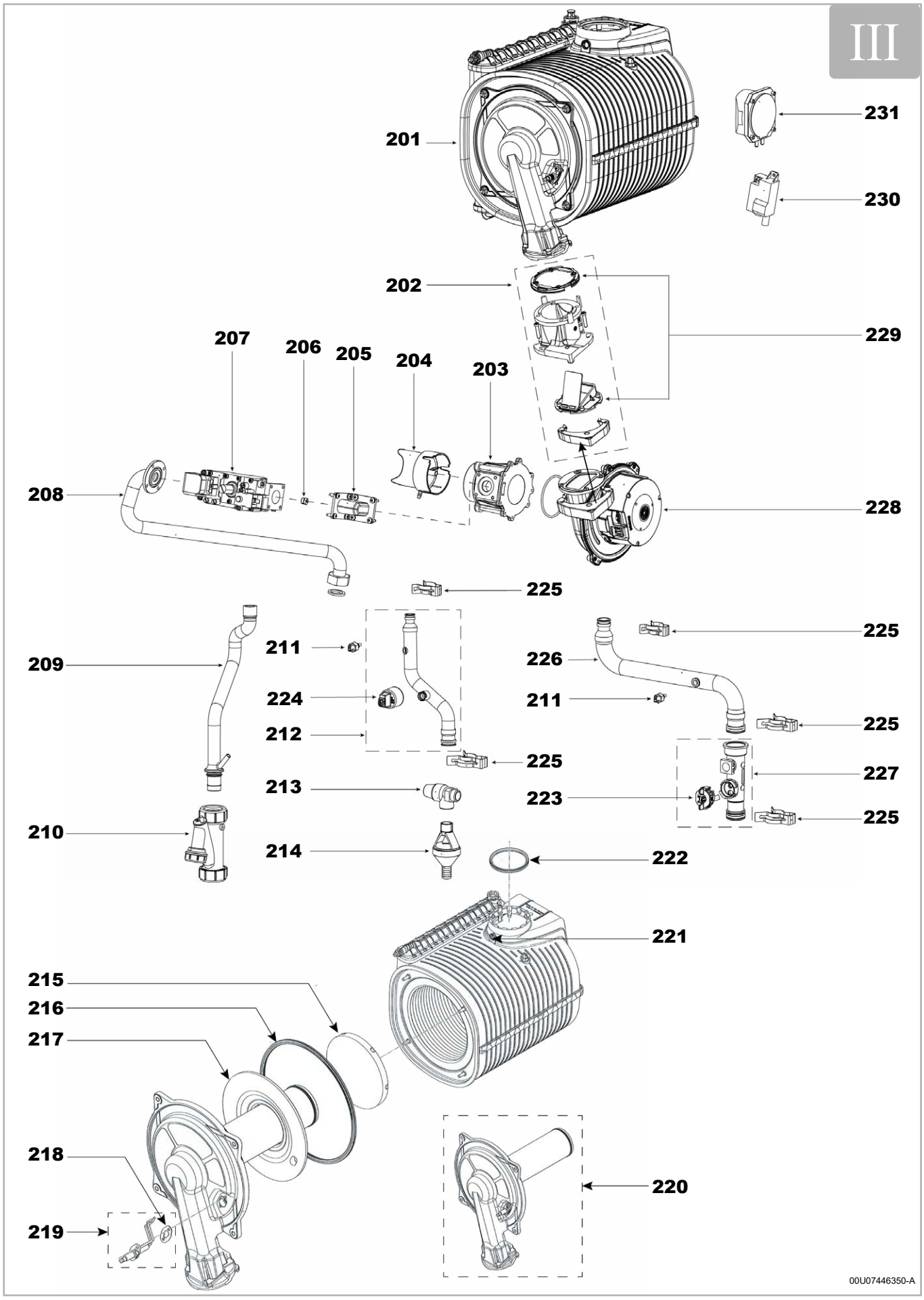

Figure 34 - Body and burner for 70 kW models and lower

ITEM	DESCRIPTION	MODELS		
		40	60	70
201	Heat exchanger	200157	200158	200159
202	Complete premix valve	200018		
203	Venturi	--	200240	200241
204	Venturi measurement connection	200221	200222	
205	Gas valve outlet elbow flange		200211	200212
206	G20 injector	--		200208
	G31 injector	--		200249
207	Gas valve	200236		200291
208	Gas tube	200230	200231	200232
209	Long bleed pipe	200437		200438
210	Condensate siphon	78571		
211	Flow / return temperature sensor	200093		
212	Starting tube with sensor	200456	200457	200459
213	Safety valve 4 bar M1/2'' - F1/2''	72165		
214	Plastic funnel M1/2	200247		
215	Exchanger bottom refractory insulation	76470		
216	Seal burner holder	200187		
217	Burner holder refractory insulation	200196		
218	Ignition electrode seal	200190		
219	Ignition electrode + seal	200188		
220	Complete burner holder	200167	200168	200169
221	Flue gas temperature probe	76516		
222	Body smoke seal	76512		
223	Flow meter	76513		
224	Pressure sensor and clip	200095		
225	Hydraulic clip (sachet)	76685		
226	Return tube	200101	200102	
227	Hydraulic manifold with flow meter	200455		
228	Fan	200238	200239	
229	Premix valve seal	200088		
230	ZAG 1 DD ignition transformer	200015		
231	Air pressure switch	200014		
--	Differential pressure switch clip	200009		
--	Pressure transfer pipe	200016		
--	Clip fan / gas tube	200215	--	
--	Ignition electrode cable	73150		
--	Tightening clamps	200303		
--	Fan EMC filter	--	--	--

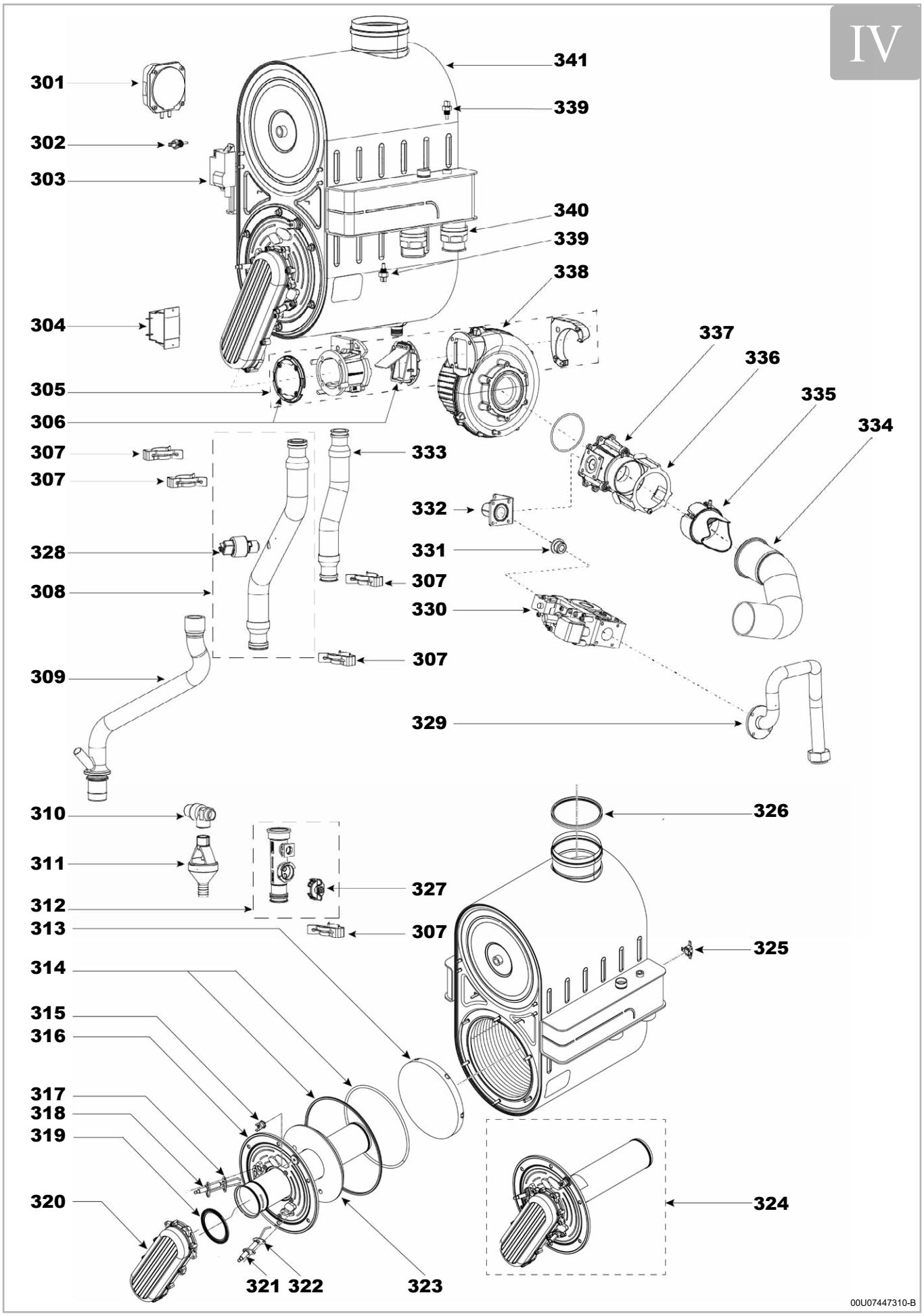

Figure 35 - Body and burner for 80 to 120 kW models

ITEM	DESCRIPTION	MODELS		
		80	100	120
301	Air pressure switch	200014		
302	Gas temperature sensor	200094		
303	ZAG 1 ignition transformer	72131		
304	EMC fan filter	--		
305	Premix trunk	200018		
306	Premix valve seal	200088		
307	Hydraulic clip (sachet)	76686		
308	Starting tube with sensor	200460		
309	Long bleed pipe	200442		
310	Safety valve 6 bar M1/2" - F1/2"	200248		
311	Plastic funnel M1/2	200247		
312	Hydraulic manifold with flow meter	200455		
313	Exchanger bottom refractory insulation	76470		
314	Seal burner holder	72153		
315	Door heat exchanger safety thermostat	76476		
316	Door equipped without ramp	200182		
317	Ignition electrode seal	200191		
318	Ignition electrode + seal	200189		
319	Burner ramp gasket	200201		
320	Premix trunk	200199		
321	Ionization Electrode + seal	72506		
322	Ionization electrode seal	200206		
323	Burner holder refractory insulation	76472		
324	Complete burner holder	200170		200179
325	Door heat exchanger safety thermostat	76475		
326	Gas outlet seal	72519		
327	Flow meter	76513		
328	Pressure sensor and clip	200095		
329	Gas tube	200233		200234
330	Gas valve	200291		
331	G31 injector	200209		200210
	G25 injector	200255		200259
332	Gas valve outlet elbow flange	200212		
333	Return tube	200103		
334	Silencer plastic elbow	200216		200217
335	Venturi measurement connection	200222		
336	Silent Elbow Clip	200278		
337	Venturi	200242		200243
338	Fan	200295		
339	Flow / return temperature sensor	200093		
340	1/4 female quick connector	200091		
341	Heat exchanger	200161		200164
--	Differential pressure switch clip	200009		
--	Pressure transfer pipe	200017		
--	Bleed	200090		
--	Ignition electrode cable	73150		
--	Back-exchanger thermostat cable	76629		
--	Condensate siphon	78571		
--	Burner rail	200202		200203
--	Braided fiber duo front door	200205		
--	Tightening clamps	200304		
--	Screw fixing cuff exchanger duo	200198		
--	Exchanger fitting seal	76645		

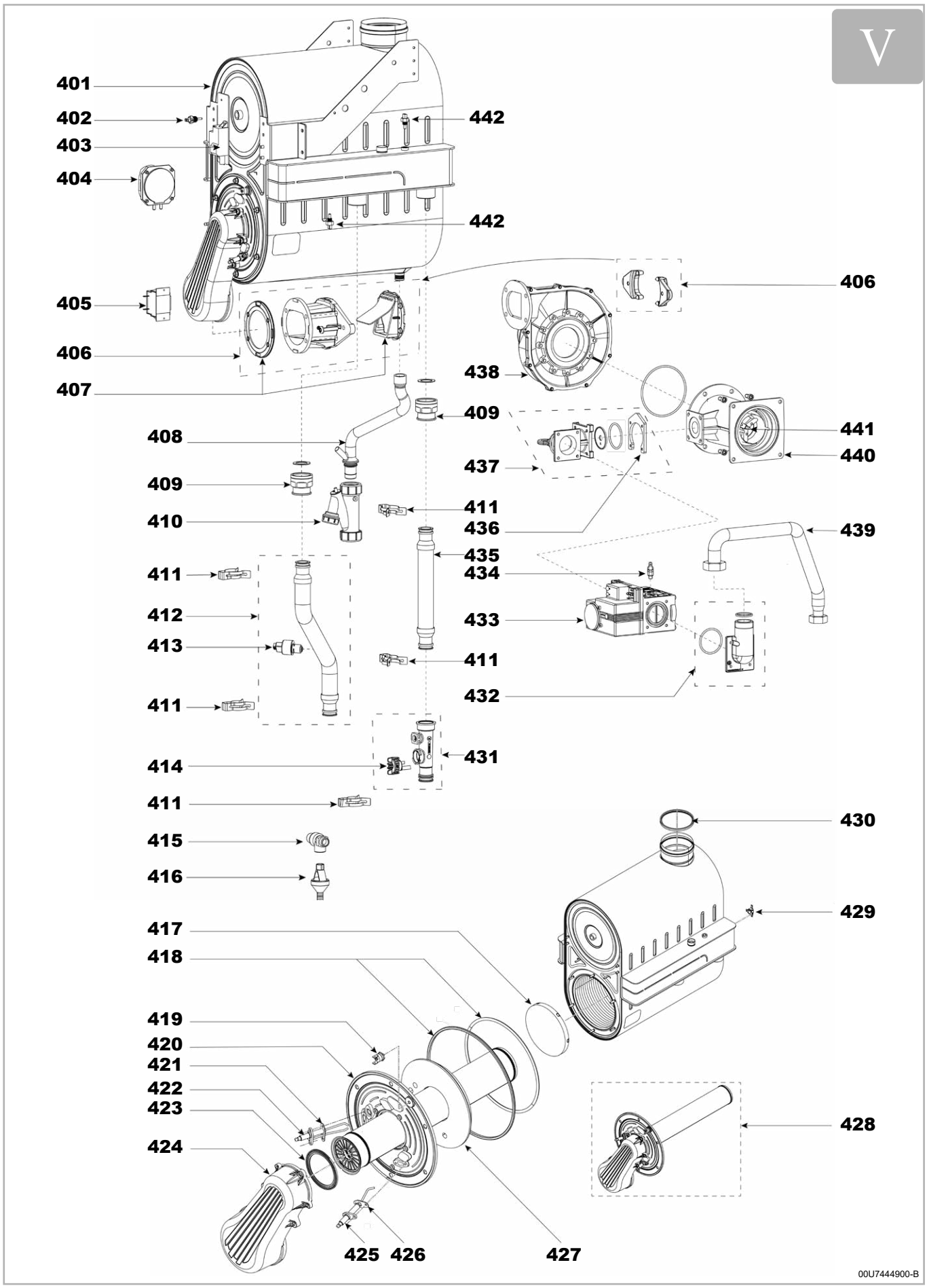

Figure 36 - Body and burner for 150 kW model

ITEM	DESCRIPTION	MODEL 150
401	Heat exchanger	200166
402	Gas temperature sensor	200094
403	ZAG 1 ignition transformer	72131
404	Air pressure switch	200014
405	EMC fan filter	--
406	Premix trunk	200019
407	Premix valve seal	200089
408	Long bleed pipe	200442
409	1/4 female quick coupler	200091
410	Condensate siphon	78571
411	Hydraulic clip (sachet)	76686
412	Starting tube with sensor	200461
413	Pressure sensor and clip	200095
414	Flow meter	76513
415	Safety valve 6 bar M1/2'' - F1/2''	200248
416	Plastic funnel M1/2	200247
417	Exchanger bottom refractory insulation	76470
418	Seal burner holder	72153
419	Door heat exchanger safety thermostat	76476
420	Equipped door without ramp	200182
421	Ignition electrode seal	200191
422	Ignition electrode + seal	200189
423	Burner ramp gasket	200201
424	Premix trunk	200200
425	Ionization Electrode + seal	72506
426	Ionization electrode seal	200206
427	Burner holder refractory insulation	76472
428	Complete burner holder	200181
429	Rear heat exchanger safety thermostat	76475
430	Gas outlet seal	72519
431	Hydraulic manifold with flow meter	200455
432	Gas valve outlet elbow flange	200218
433	Gas valve	200237
434	Pressure tape	200446
435	Return tube	200105
436	Venturi bracket	200226
437	Elbow + caliper + seal assembly	200220
438	Fan	200296
439	Gas tube	200235
440	Venturi	200245
441	Remote measurement device	200224
442	Flow / return temperature sensor	200093
--	Differential pressure switch clip	200009
--	Pressure transfer pipe	200017
--	Bleed	200090
--	Ignition electrode cable	73150
--	Back-exchanger thermostat cable	76629
--	Burner rail	200204
--	Braided fiber duo front door	200205
--	Tightening clamps	200304
--	Screw fixing cuff exchanger duo	200198
--	Exchanger fitting seal	76645

11. CUSTOMER REGULATION PARAMETERS TABLE

Boiler: ..... site: .....

serial no: ....

Please transfer all parameter modifications into this document!

Note: The "access" column indicates the level of accessibility to information for programming (U for end user, M for commissioning and S for specialist). The *Commissioning* accessibility level integrates the *End User* level. In the same way, the *Specialist* level integrates the *Commissioning* level.

Line no.	Programming	Access	Default value	Customer setting
	Time setting			
1	Hours / minutes	U	00: 00	
2	Day / month	U	dd.mm	
3	Year	U	yyyy	
5	Start of summer time	S	dd.mm	
6	End of summer time	S	dd.mm	
	User interface			
20	Language	U	English	
22	Temporary	M	info	
26	Operation locking	M	stop	
27	Programming locking	M	stop	
28	Direct adjustment	M	with validation	
29	Units	U	°C, bar	
42	Assignment appliance 1	M	CC 1	
44	Heating circuit 2 operation	M	common with heating circuit 1	
46	Heating circuit 3/P operation	M	common with heating circuit 1	
70	Software version	M		
	Timer programme 1: Heating circuit 1			
500	Preselection	U	Mon-Sun	
501	1st period start time	U	06:00	
502	1st period stop time	U	22:00	
503	2nd period start time	U	--	
504	2nd period stop time	U	--	
505	3rd period start time	U	--	
506	3rd period stop time	U	--	
516	Default values	U	Frost protection	
	Timer programme 2: Heating circuit 2			
520	Preselection	U	Mon-Sun	
521	1st period start time	U	06:00	
522	1st period stop time	U	22:00	
523	2nd period start time	U	--	
524	2nd period stop time	U	--	
525	3rd period start time	U	--	

Line no.	Programming	Access	Default value	Customer setting
526	3rd period stop time	U	--	
536	Default values	U	Frost protection	
	Timer programme 3: Heating circuit 3			
540	Preselection	U	Mon-Sun	
541	1st period start time	U	06:00	
542	1st period stop time	U	22:00	
543	2nd period start time	U	--	
544	2nd period stop time	U	--	
545	3rd period start time	U	--	
546	3rd period stop time	U	--	
556	Default values	U	Frost protection	
	Timer programme 4: Domestic hot water (DHW) production			
560	Preselection	U	Mon-Sun	
561	1st period start time	U	06:00	
562	1st period stop time	U	22:00	
563	2nd period start time	U	--	
564	2nd period stop time	U	--	
565	3rd period start time	U	--	
566	3rd period stop time	U	--	
576	Default values	U	Frost protection	
	Timer programme 5			
600	Preselection	U	Mon-Sun	
601	1st period start time	U	06:00	
602	1st period stop time	U	22:00	
603	2nd period start time	U	--	
604	2nd period stop time	U	--	
605	3rd period start time	U	--	
606	3rd period stop time	U	--	
616	Default values	U	Frost protection	
	Holidays: Heating circuit 1			
641	Preselection	U	period 1	
642	Start (dd.mm)	U	--	
643	End (dd.mm)	U	--	
648	Temperature level	U	Frost protection	
	Holidays: Heating circuit 2			
651	Preselection	U	period 1	
652	Start (dd.mm)	U	--	
653	End (dd.mm)	U	--	
658	Temperature level	U	Frost protection	
	Holidays: Heating circuit 3			
661	Preselection	U	period 1	
662	Start (dd.mm)	U	--	
663	End (dd.mm)	U	--	

Line no.	Programming	Access	Default value	Customer setting
668	Temperature level	U	Frost protection	
	Heating circuit 1			
710	Ambient temperature comfort setpoint CC1	U	20 °C	
712	Reduced ambient temperature setpoint CC1	U	18 °C	
714	Ambient temperature frost protection setpoint CC1	U	10 °C	
716	Maximum comfort setpoint CC1	S	35 °C	
720	Heating curve slope 1	U	1.5	
721	Heating curve displacement CC1	S	0 °C	
726	Heating curve translation CC1	U	stop	
730	Summer/winter switching heating circuit 1	U	19 °C	
732	Daily heating limit CC1	U	-3 °C	
740	Minimum start temperature limitation CC1	S	8 °C	
741	Maximum start temperature limitation CC1	U	80 °C	
742	Room thermostat start temperature CR1	S	65 °C	
746	Heating request timer	M	0 s	
750	Ambient temperature influence factor CC1	S	20%	
760	Ambient temperature limitation CC 1	S	1 °C	
761	Terminal regulator heating limit CC1	S	16%	
770	Ambient cons. over-value CC1 (accelerated heating)	S	3 °C	
780	Quick reduction CC1	S	stop	
790	Max. advance optimise switch-on time CC1	S	00:00	
791	Max. advance optimise switch-off time CC1	S	00:00	
800	Start of increase Reduced setpoint TA CC1	S	-5 °C	
801	End of increase reduced set point TA CC1	S	-15 °C	
809	Uninterrupted pumps operation	S	no	
820	Overheating protection Circuit to pump CC1	S	on	
830	Mixing valve setpoint over-value CC1	S	3 °C	
832	Servomotor regulation type heating circuit 1	S	3 points	
833	Servomotor differential heating circuit 1	S	2 °C	
834	Servomotor operating time CC1	S	120 s	
835	P band (Xp) Heating circuit 1	S	32 °C	
836	Integration time (Tn) heating circuit 1	S	120 s	
850	Screed drying function CC1	M	stop	
851	Manual setpoint for drying concrete screeds CC1	M	25 °C	
861	Over-temperature reduction CC 1	S	always	
870	Heating circuit 1 with buffer tank	S	no	
872	CC 1 with pre-regulator/supply pump	S	no	
881	Wert 5936	S	100%	
882	Min. speed of the CC1 pump	S	100%	
883	Max. speed of the CC1 pump	S	100%	
888	Rot. speed 5% curve cor.	S	33%	
889	Speed. regl. filtr. time const.	S	5 min	
898	T° level switching	S	reduced	
900	Switching of heating circuit 1	S	protection mode	

Line no.	Programming	Access	Default value	Customer setting
	Heating circuit 2			
1010	Operation heating circuit 2	U	20 °C	
1012	Ambient temperature comfort setpoint CC2	U	18 °C	
1014	Reduced ambient temperature setpoint CC2	U	10 °C	
1016	Ambient frost protection temperature setpoint CC2	S	35 °C	
1020	Maximum comfort setpoint CC2	U	1.5	
1021	Heating curve slope 2	S	0 °C	
1026	Heating curve displacement CC2	S	Stop	
1030	Heating curve translation CC2	U	19 °C	
1032	Summer/winter switching heating circuit 2	S	-3 °C	
1040	Daily heating limit CC2	M	8 °C	
1041	Minimum start temperature limitation CC2	M	80 °C	
1042	Maximum start temperature limitation CC2	U	65 °C	
1050	Ambient temperature influence factor CC2	S	20%	
1060	Ambient temperature limitation CC2	S	1 °C	
1061	Terminal regulator heating limit CC2	S	16%	
1070	Ambient cons. over-value CC2 (accelerated heating)	S	3 °C	
1080	Quick reduction CC2	S	stop	
1090	Max. advance optimise switch-on time CC2	S	00:00	
1091	Max. advance optimise switch-off time CC2	S	00:00	
1100	Start of increase Reduced ambient temperature setpoint Heating circuit 2	S	-5 °C	
1101	End of increase reduced set point Heating circuit 2	S	-15 °C	
1120	Overheating protection pump CC2	S	on	
1130	Mixing valve setpoint over-value CC2	S	3 °C	
1132	Motor control mode heating circuit 2	S	3 points	
1133	Servomotor differential heating circuit 2	S	2 °C	
1134	Servomotor operating time CC2	S	120 s	
1135	P band (Xp) Heating circuit 2	S	32 °C	
1136	Integration time (Tn) heating circuit 2	S	120 s	
1150	Screed drying function CC2	M	stop	
1151	Manual setpoint for drying concrete screeds CC2	M	25 °C	
1161	Over-temperature reduction CC 2	S	always	
1170	Heating circuit 2 with buffer tank	S	no	
1172	Heating circuit 2 with Pre-regulator/Supply pump	S	no	
1181	Wert 5937	S	100%	
1182	Min. speed of the CC2 pump	S	100%	
1183	Max. speed of the CC2 pump	S	100%	
1200	Operating mode switchin CC2	S	protection mode	
	Heating circuit 3			
1310	Ambient temperature comfort setpoint CCP	U	20 °C	
1312	Reduced ambient temperature setpoint CCP	U	18 °C	
1314	Ambient setpoint temp. frost protection CCP	U	10 °C	
1316	Maximum comfort setpoint CCP	S	35 °C	
1320	Heating characteristic slope CCP	U	1.5	

Line no.	Programming	Access	Default value	Customer setting
1321	Heating characteristic offset CCP	S	0 °C	
1326	Heating characteristic translation CCP	S	Stop	
1330	Summer/Winter switching temperature CCP	U	19 °C	
1332	Daily heating limit CCP	S	-3 °C	
1340	Maximum start temperature limitation CCP	M	8 °C	
1341	Maximum start temperature limitation CCP	M	80 °C	
1342	Room thermostat start temperature CC3	U	65 °C	
1350	Ambient temperature influence factor CCP	S	20%	
1360	Ambient temperature limitation Heating circuit P	S	1 °C	
1361	Terminal regulator heating limit CCP	S	16%	
1370	Ambient cons. over-value CCP (accelerated heating)	S	3 °C	
1380	Rapid reduction heating circuit P	S	stop	
1390	Max. anticipated switch-on time CCP	S	00:00	
1391	Max. anticipated switch-off time CCP	S	00:00	
1400	Start of increase ambient temperature setpoint CCP	S	-5 °C	
1401	End of increase ambient temperature setpoint CCP	S	-15 °C	
1420	Overheating protection of CCP to pump	S	on	
1430	Mixing valve setpoint over-value CCP	S	3 °C	
1432	Servomotor regulation type CCP	S	3 points	
1433	Servomotor differential CCP	S	2 °C	
1434	Servomotor travel time CCP	S	120 s	
1435	Band P (Xp) CCP	S	32 °C	
1436	Integration time (Tn) CCP	S	120 s	
1450	Screed drying function CCP	M	stop	
1451	Manual setpoint for drying concrete screeds CCP	M	25 °C	
1461	Over-temperature reduction CC3	S	always	
1470	Heating circuit P with buffer tank	S	no	
1472	Heating circuit 3 with Pre-regulator/Supply pump	S	no	
1481	Wert 5938	S	100%	
1482	Min. speed of the CCP pump	S	100%	
1483	Max. speed of the CCP pump	S	100%	
1500	Operating mode switching heating circuit P	S	protection mode	
	Domestic hot water			
1610	DHW temperature nominal setpoint	U	50 °C	
1612	DHW temperature reduced setpoint	S	45 °C	
1614	DHW temperature nominal max. setpoint	S	65 °C	
1620	DHW release	M	24/24	
1630	DHW load priority	M	none	
1640	Anti-legionalla function	S	stop	
1641	Frequency of anti-legionella operation	S	3	
1642	Anti-legionella operation Day	S	Monday	
1644	Time of anti-legionella operation	S	05:00	
1645	Anti-legionella operation setpoint (1640)	S	55 °C	
1646	Duration the legionella operation set point is maintained	S	30 min	

Line no.	Programming	Access	Default value	Customer setting
1647	Circulation pump operation during legionella function	S	on	
1660	DHW circulation pump release	S	DHW release	
1662	Continuous circ. pump	S	no	
1663	DHW circulation setpoint	S	45 °C	
1680	DHW rate switching	S	stop	
	Consumer circuit 1			
1859	Cons request output setpoint T°	U	60 °C	
1874	DHW load priority	S	no	
1875	Excess heat absorption	S	1	
1878	With storage tank	S	no	
1880	With prim regul./primar pump	S	no	
	Consumer circuit 2			
1909	Cons request output setpoint T°	M	60 °C	
1924		S	no	
1925	Excess heat absorption	S	on	
1928	With storage tank	S	no	
1930	With prim regul./primar pump	S	no	
	Consumer circuit 3			
1959	Flow setpoint T°	M	70 °C	
1975	Excess heat absorption	S	1	
1978	With storage tank	S	no	
1980	With prim regul./primar pump	S	no	
	Pool			
2056	Boiler setpoint	S	22 °C	
	Pre-regulator/supply pump			
2110	Min. start temperature limitation pre-regulator	S	8 °C	
2111	Max. start temperature limitation pre-regulator	S	80 °C	
2130	Mixing valve setpoint over-value Pre-regulator	S	7 °C	
2150	Pre-regulator/supply pump	S	after buffer tank	
	Boiler			
2203	Hot release oil/gas below external temp.	S	0 °C	
2210	Minimum limitation boiler temperature	S	8 °C	
2212	Maximum limitation boiler temperature	S	85 °C	
2214	Boiler setpoint in manual mode	U	60 °C	
2217	Frost protection setpoint	S	7 °C	
2243	Minimum burner pause time	S	5 min	
2250	Pump stop timer	S	5 min	
2253	DHW supply pump timer stop	S	1 min	
2270	Return temperature limitation	S	8 °C	
2321	Rot. speed on start	S	100%	
2322	Minimum boiler pump rotation speed	S	40: 34 % 60: 42 % 70: 35 % 80: 40 % 100: 40 % 120: 42 % 150: 54 %	

Line no.	Programming	Access	Default value	Customer setting
2323	Maximum boiler pump rotation speed	S	40: 74 % 60: 78 % 70: 78 % 80: 75 % 100: 77 % 120: 74 % 150: 92 %	
2324	Band P rotation speed Xp boiler	S	32 °C	
2325	Boiler speed integration time	S	120 s	
2326	Boiler speed bypass time	S	10 s	
2334	Power at min. pump rot. speed	S	30%	
2335	Power at max. pump rot. speed	S	100%	
2441	Maximum heating mode fan rotation speed	S	40: 8740 60: 9500 70: 9500 80: 5500 100: 7400 120: 7080 150: 6100	
2442	Max. charge full fan speed	S	40: 8740 60: 9500 70: 9500 80: 5500 100: 7400 120: 7400 150: 6100	
2444	Max DHW fan speed	S	40: 8740 60: 9500 70: 9500 80: 5500 100: 7400 120: 7400 150: 6100	
2450	Regulator timer	S	heating regime and DHW	
2452	Regulator speed timer	S	40: 2350 60: 2400 70: 2400 80: 2000 100: 2000 120: 2000 150: 2000	
2454	Heating circuit activation differential	S	3 °C	
2455	Min. heating circuit disc. different.	S	3 °C	
2456	Max. heating circuit disc. different.	S	6 °C	
2457	Heating circuit transitional period	S	20 min	
2460	DHW activation differential	S	3 °C	
2461	Min DHW disconnection differential	S	3 °C	
2462	Max DHW disconnection differential	S	6 °C	
2463	DHW transitional period	S	20 min	
2470	Spec mode heating start timer	M	0 s	
2503	Switching wait time	S	6 s	
2550	Gas energy meter	S	on	
2551	Gas meter correction	S	1	
2560	Exhaust flap stop timer	S	30 s	
2630	Auto drain function	S	Stop	
2655	Drain function activation time	S	10 s	

Line no.	Programming	Access	Default value	Customer setting
2656	Drain cut-off duration	S	5 s	
2657	Number of repetitions	S	3	
2662	Hot circuit drain duration	S	10 min	
2663	DHW drain duration	S	5 min	
	Cascade			
3510	Cascade operating strategy	S	Switch-on early, stop delayed	
3511	Power band, lower limit (PMin)	S	30%	
3512	Power band, upper limit (Pmax)	S	90%	
3530	Integral release sequence generators	S	200 °Cmin	
3531	Integral reset sequence generators	S	100 °Cmin	
3532	Restart lock	S	300 s	
3533	Sequential generator connection timer	S	5 min	
3534	Duration of basic forced speed when generator is switched on	S	60 s	
3535	DHW activation timer	S	5 min	
3540	Delay before auto generator cascade switching	S	500 h	
3541	Exclusion of auto cascade generator switching	S	none	
3544	Pilot generator	S	generator 1	
3560	Minimum cascade return setpoint	S	8 °C	
3562	Cascade return limit, influence on consumer circuit	S	on	
	Solar			
3810	Temperature difference Solar on	S	8 °C	
3811	Temperature difference Solar off	S	4 °C	
3812	DHW tank minimum charging temperature	S	30 °C	
3813	Tank activation differential	S	8 °C	
3814	Tank stop differential.	S	4 °C	
3815	Min. storage tank loading temperature	S	30 °C	
3818	Minimum pool loading temperature	S	30 °C	
3822	Tank loading priority	S	DHW tank	
3825	Relative priority loading time	S	20 min	
3826	Relative priority waiting time	S	5 min	
3827	Parallel operation waiting time	S	20 min	
3828	Secondary pump start-up timer	S	60 s	
3830	Collector start function	S	30 min	
3831	Collector pump minimum operating time	S	20 s	
3840	Solar collector anti-freeze temperature	S	0 °C	
3850	Temp. protection against collector overheating	S	120 °C	
3860	Coolant evaporation temperature	S	140 °C	
3870	Solar pump minimum rotation speed	S	40%	
3871	Solar pump maximum rotation speed	S	100%	
3880	Antifreeze type	S	none	
3881	Antifreeze concentration	S	30%	
3884	Solar pump flow volume	S	200 l/h	
3887	Pulse value for gain	S	10 l	

Line no.	Programming	Access	Default value	Customer setting
	Solid fuel boiler			
4102	Comb. solid boiler other gen. heat	S	on	
4110	Min. setpoint solid fuel boiler	S	40 °C	
4130	Diff. start-up time solid fuel boiler	S	8 °C	
4131	Diff. shut-down time solid fuel boiler	S	4 °C	
4133	Comparison time solid fuel boiler	S	DHW B3 sensor	
	Buffer accumulator			
4720	Automatic blocking of boilers	S	with B4	
4722	Diff. time Buffer/CC to release Producer	S	-5 °C	
4724	Min. time accumulator in heating mode	S	8 °C	
4750	Max. loading temp. storage tank	S	80 °C	
4755	Cooling time adiabatic buffer tank	S	60 °C	
4756	Cooling adiabat. Storage tank DHW/CC	S	stop	
4757	Cooling adiabat. storage tank Collector	S	stop	
4783	Storage tank with solar integration	S	yes	
4790	Temperature difference return Bypass On	S	10 °C	
4791	Temperature difference return Bypass Off	S	5 °C	
4795	Temperature comparison return Bypass	S	storage tank sensor B1	
4796	Direction of operation return bypass	S	lowering of return T°	
4800	DHW partial load setpoint	S	60 °C	
4810	Storage tank continuous load	S	stop	
4811	Min T° full load	S	8 °C	
4813	Full load sensor	S	with B42/B41	
	Drinking water tank			
5020	DHW flow setpoint over-value	S	10 °C	
5021	DHW refill over-value	S	8 °C	
5022	DHW loading regulation	S	complete charge	
5030	DHW loading time limitation	S	150 min	
5040	DHW discharge protection	S	Automatic	
5055	Cooling time adiabatic DHW tank	S	80 °C	
5056	Cooling adiabat. Boiler DHW tank/CC	S	stop	
5060	DHW electrical heater operating mode	S	replacement function	
5061	DHW electrical heater release	S	DHW release	
5062	DHW electrical heater regulation	S	DHW sensor	
5085	DHW tank over-temperature reduction	S	on	
5090	DHW tank with buffer tank	S	no	
5092	DHW tank with Pre-regulator/Supply pump	S	no	
5101	DHW pump minimum rotation speed	S	100%	
5102	DHW pump maximum rotation speed	S	100%	
5108	Load pump start rot. speed	S	100%	
	DHW instantaneous water heater			
5420	DHW flow setpoint over-value	S	10 °C	
5444	Flow detection threshold	S	1 l/min	
5445	Differential flow detection	S	0.5 l/min	
5450	DHW draw-off fine gradient	S	0.25K/s	

Line no.	Programming	Access	Default value	Customer setting
5451	Grad. start draw-off maintain heat	S	-1 K/s	
5452	DHW draw-off start gradient	S	-1 K/s	
5455	Crr T° setpoint DHW draw-off 40°C	S	0 °C	
5456	Crr T° setpoint DHW draw-off 60°C	S	0 °C	
5460	Setpoint T° maintain heat	S	50 °C	
5461	Corr. setpoint T°maintain heat 40 °C	S	0 °C	
5462	Corr. setpoint T°maintain heat 60 °C	S	0 °C	
5464	Maintain heat release	S	DHW release	
5468	Draw-off time DHW maint. heat	S	5 s	
5470	Heat maintenance without heating	S	10 min	
5471	Maintain heat in reg. Heating	S	5 min	
5472	Maintain heat pump timer stop	S	20 min	
5473	Maintain heat pump timer stop	S	0 s	
5475	Reg. sensor maintain heat	S	Boiler sensor B2	
5482	FlowSwitch time DHW closed	S	0 s	
5530	Instantaneous water heater min. pump speed	S	40%	
5531	Instantaneous water heater max. pump speed	S	100%	
5550	Aqua booster	S	no	
	General functions			
5570	dT°regul on dT 1	S	20 °C	
5571	dT°regul off dT 1	S	10 °C	
5572	Regul min act time dT 1	S	0 °C	
5573	Sensor 1 regulator dT 1	S	none	
5574	Sensor 2 regulator dT 1	S	none	
5575	Min on time regdT1	S	0 s	
5577	Pump/valve kick-start K21	S	on	
5580	dT°regul on dT 2	S	20 °C	
5581	dT°regul off dT 2	S	10 °C	
5582	Regul min act time dT 2	S	0 °C	
5583	Sensor 1 regulator dT 2	S	none	
5584	Sensor 2 regulator dT 2	S	none	
5585	Min on time regdT2	S	0 s	
5587	Pump/valve kick-start K22	S	on	
	Configuration			
5710	Heating circuit 1	M	stop	
5715	Heating circuit 2	M	stop	
5721	Heating circuit 3	M	stop	
5730	DHW sensor	M	DHW B3 sensor	
5731	DHW pump/valve	M	Load pump	
5732	Pump cut-off time if change CH to DHW	M	0 s	
5733	Pump stop delay if change CH -> DHW	M	0 s	
5734	DHW direct valve base pos.	S	last request	
5737	DHW diverter valve action direction	S	DHW position	
5774	DHW hot pump+direct valve cmd	M	all requests	
5840	Regulating device	M	Load pump	

Line no.	Programming	Access	Default value	Customer setting
5841	External solar exchanger	M	common	
5870	Combination tank	M	no	
5890	Relay output QX1	M	Alarm output K10	
5891	Relay output QX2	M	Valve/DHW pump Q3	
5892	Relay output QX3	M	Boiler pump Q1	
5931	Sensor input BX2	M	none	
5932	Sensor input BX3	M	none	
5950	Input H1 function selection	M	none	
5951	Contact type H1	M	operation	
5953	H1 voltage 1 value	M	0V	
5954	H1 function 1 value	M	0	
5955	H1 voltage 2 value	M	10 V	
5956	H1 function 2 value	M	1000	
5977	Input H5 function selection	M	none	
5978	H5 contact action direction	M	Operation contact	
6020	Extension module function 1	M	none	
6021	Extension module function 2	M	none	
6022	Extension module 3 funct	M	none	
6024	Module 1 EX21 input funct	M	none	
6026	Module 2 EX21 input funct	M	none	
6028	Module 3 EX21 input funct	M	none	
6030	Relay output QX21 module 1	M	none	
6031	Relay output QX22 module 1	M	none	
6032	Relay output QX23 module 1	M	none	
6033	Relay output QX21 module 2	M	none	
6034	Relay output QX22 module 2	M	none	
6035	Relay output QX23 module 2	M	none	
6036	Relay output QX21 module 3	M	none	
6037	Relay output QX22 module 3	M	none	
6038	Relay output QX23 module 3	M	none	
6040	Module 1 BX21 sensor input	M	none	
6041	Module 1 BX22 sensor input	M	none	
6042	Module 2 BX21 sensor input	M	none	
6043	Module 2 BX22 sensor input	M	none	
6044	Module 3 BX21 sensor input	M	none	
6045	Module 3 BX22 sensor input	M	none	
6046	Function input H2/H21 mod. 1	M	none	
6047	H2/H21 action direction module 1	M	operation	
6049	Val. Voltage 1 H2/H21 mod. 1	M	0V	
6050	Func.val 1 H2/H21 mod 1	M	0	
6051	Val. Voltage 2 H2/H21 mod. 1	M	0V	
6052	Fonc.val 2 H2/H21 module 1	M	0	
6054	Function input H2/H21 mod. 2	M	none	
6055	H2/H21 action direction module 2	M	operation	

Line no.	Programming	Access	Default value	Customer setting
6057	Val. Voltage 1 H2/H21 mod. 2	M	0V	
6058	Fonc.val 1 H2/H21 module 2	M	0	
6059	Val. Voltage 2 H2/H21 mod. 2	M	0V	
6060	Fonc.val 2 H2/H21 module 2	M	0	
6062	Function input H2/H21 mod. 3	M	none	
6063	H2/H21 action direction module 3	M	operation	
6065	Val. Voltage 1 H2/H21 mod. 3	M	0V	
6066	Func.val 1 H2/H21 module 3	M	0	
6067	Val. Voltage 2 H2/H21 mod. 3	M	0V	
6068	Fonc.val 2 H2/H21 module 3	M	0	
6085	Output P1 function choice	S	Boiler pump Q1	
6086	Logic signal P1	S	reverse	
6100	Correction of outdoor temperature sensor	S	0 °C	
6110	Building time constant	S	8 h	
6116	Setpoint compensation time constant	S	1 min	
6117	(Central compensation setpoint)	S	5 °C	
6120	Installation antifreeze	S	stop	
6127	Valve/pump kick-start duration	S	30 s	
6240	Output function UX21 module 1	S	none	
6241	Logic signal output UX21 module 1	S	standard	
6242	Signal output UX21 module 1	S	PWM	
6243	Output function UX22 module 1	S	none	
6244	Logic signal output UX22 module 1	S	standard	
6245	Signal output UX22 module 1	S	PWM	
6246	Output function UX21 module 2	S	none	
6247	Logic signal output UX21 module 2	S	standard	
6248	Signal output UX21 module 2	S	PWM	
6249	Output function UX22 module 2	S	none	
6250	Logic signal output UX22 module 2	S	standard	
6251	Signal output UX22 module 2	S	PWM	
6252	Output function UX21 module 3	S	none	
6253	Logic signal output UX21 module 3	S	standard	
6254	Signal output UX21 module 3	S	PWM	
6255	Output function UX22 module 3	S	none	
6256	Logic signal output UX22 module 3	S	standard	
6257	Signal output UX22 module 3	S	PWM	
6351	OT function channel 1	S	Room control ext.1	
6355	Room control CC1	S	Internal	
6356	Room control CC2	S	Internal	
6357	Room control CC3	S	Internal	
6359	DHW external control	S	none	
	Bus			
6600	Appliance address	M	1	
6601	Segment address	S	0	
6610	Display system messages	S	no	

Line no.	Programming	Access	Default value	Customer setting
6611	Alarm relay system messages	S	no	
6612	Alarm timeout	S	2 min	
6620	Active range of central switches	S	System	
6621	Summer/Winter switching	S	localised	
6623	Operating mode changeover	S	centralised	
6624	Generator manual blockage	S	localised	
6630	Cascade master	S	2	
6631	External generator in eco mode	S	stop	
6640	Time source	M	autonomous clock in regulator	
	Modbus			
6651	Slave address	S	1	
6652	Baud rate	S	19200	
6653	Parity	S	none	
6654	Stop bit	S	1	
	Error			
6705	Software diagnostic code	U	0	
6710	Alarm relay reset	M	no	
6740	Output 1 T° alarm	S	120 min	
6741	Output 2 T° alarm	S	120 min	
6742	Output 3 T° alarm	S	120 min	
6743	Boiler T° alarm	S	120 min	
6745	DHW charging alarm	S	8 h	
6800	History 1	S	00:00	
6805	Software diagnostic code 1	S	0	
6810	History 2	S	00:00	
6815	Software diagnostic code 2	S	0	
6820	History 3	S	00:00	
6825	Software diagnostic code 3	S	0	
6830	History 4	S	00:00	
6835	Software diagnostic code 4	S	0	
6840	History 5	S	00:00	
6845	Software diagnostic code 5	S	0	
6850	History 6	S	00:00	
6855	Software diagnostic code 6	S	0	
6860	History 7	S	00:00	
6865	Software diagnostic code 7	S	0	
6870	History 8	S	00:00	
6875	Software diagnostic code 8	S	0	
6880	History 9	S	00:00	
6885	Software diagnostic code 9	S	0	
6890	History 10	S	00:00	
6895	Software diagnostic code 10	S	0	
6900	History 11	S	00:00	
6905	Software diagnostic code 11	S	0	

Line no.	Programming	Access	Default value	Customer setting
6910	History 12	S	00:00	
6915	Software diagnostic code 12	S	0	
6920	History 13	S	00:00	
6925	Software diagnostic code 13	S	0	
6930	History 14	S	00:00	
6935	Software diagnostic code 14	S	0	
6940	History 15	S	00:00	
6945	Software diagnostic code 15	S	0	
6950	History 16	S	00:00	
6955	Software diagnostic code 16	S	0	
6960	History 17	S	00:00	
6965	Software diagnostic code 17	S	0	
6970	History 18	S	00:00	
6975	Software diagnostic code 18	S	0	
6980	History 19	S	00:00	
6985	Software diagnostic code 19	S	0	
6990	History 20	S	00:00	
6995	Software diagnostic code 20	S	0	
6999	Fault history reset	S		
	Maintenance			
7040	Maintenance interval burner operating hours	S	1500 h	
7041	Burner operating hours since maintenance	S	0 h	
7042	Maintenance interval burner start-ups	S	9000	
7043	Burner starts since last maintenance	S	0	
7044	Maintenance interval	S	24 months	
7045	Time since maintenance	S	0 months	
7050	Speed limit fan rotation For maintenance message	S	0	
7051	Signalling ionization current maintenance	S	0	
7130	Chimney function	U	0	
7131	Chimney function burner power	U	3	
7140	Manual operation	U	stop	
7143	Regulator stop function	S		
7145	Regulator stop setpoint	S	0	
7146	Drain function	M		
7147	Drain type	M		
7170	Customer Service Centre	M		
7250	Pos memory Pstick	S		
7252	Pstick control	S		
	Inputs/Outputs test			
7700	Relay test	M		
7713	P1 output test	M		
7780	Output test UX21 module 1	M		
	UX21 voltage value module 1	M		
	UX21 PWM value module 1	M		

Line no.	Programming	Access	Default value	Customer setting
7782	Output test UX22 module 1	M		
	UX22 voltage value module 1	M		
	UX22 PWM value module 1	M		
7784	Output test UX21 module 2	M		
	UX21 voltage value module 2	M		
	UX21 PWM value module 2	M		
7786	Output test UX22 module 2	M		
	UX22 voltage value module 2	M		
	UX22 PWM value module 2	M		
7788	Output test UX21 module 3	M		
	UX21 voltage value module 3	M		
	UX21 PWM value module 3	M		
7790	Output test UX22 module 3	M		
	UX22 voltage value module 3	M		
	UX22 PWM value module 3	M		
	Status			
	Cascade diagnostic			
	Generator diagnostic			
8318	Max burnt gas temperature	M		
8378	Global heating energy	S		
8379	Global DHW energy	S		
8381	Heating gas energy	S		
8382	DHW gas energy	S		
	Consumer diagnostic			
8701	Minimum outdoor temperature	U		
8702	Maximum outdoor temperature	U		
8703	Resulting outdoor temperature	U		
8742	Modem ambient temperature CC1	S		
8772	Modem ambient temperature CC2	S		
	Safety unit			
9500	Pre-ventilation time	S	5 s	
9504	Fan speed in pre-ventilation	S	40: 4090 60: 4220 70: 4930 80: 3100 100: 3100 120: 2900 150: 2690	
9512	Fan rotation speed in charge of ignition	S	40: 2430 60: 3280 70: 3160 80: 1930 100: 1930 120: 2120 150: 1650	
9524	Part charge rot. speed setpoint	S	40: 2430 60: 2500 70: 2540 80: 1930 100: 1930 120: 2070 150: 1650	

Line no.	Programming	Access	Default value	Customer setting
9529	Nom char. speed setpoint	S	40: 8740 60: 9500 70: 9500 80: 5500 100: 6450 120: 7400 150: 6100	
9626	Power slope/fan speed	S	40: 219,1 60: 172,8 70: 135,9 80: 38,8 100: 61,70 120: 61,7 150: 42,1	
9627	Section Y fan power/speed	S	40: -23,9 60: -6,2 70: -2 80: -2,9 100: -2,8 120: -2,8 150: -4,5	
9650	Chimney drying	S	stop	
9651	Chimney drying speed setpoint	S	40: 2350 60: 2400 70: 2400 80: 1870 100: 2000 120: 2000 150: 1650	
9652	Chimney drying time	S	10 min	

12. OPTION KITS

12.1.Boiler mounted kits

1. UIN 235347 VFC PUMP CONTROL
2. UIN 235342 BOILER RUN/FAULT SIGNALLING
3. UIN 235792 HC EXTENSION MODULE
4. UIN 235787 PWM TO 0-10V CONVERTER
5. UIN 235783 LPB INTERFACE
6. UIN 235791 MODBUS INTERFACE

12.2.External kits

7. UIN 235781 PROGRAMMABLE ROOM SENSOR
8. UIN 533901457 OUTDOOR TEMPERATURE SENSOR
9. UIN 235782 OFFSET ADJUSTABLE ROOM SENSOR
10. UIN 563605609 INSERTION TEMP. SENSOR AND POCKET
11. UIN 533901594 STRAP ON TEMP. SENSOR
12. UIN 235784 MERLEY SEQUENCER – ASSEMBLED
13. UIN 235785 MERLEY SEQUENCER – KIT
14. UIN 235788 HEATING CIRCUIT CONTROL – ASSEMBLED
15. UIN 235789 HEATING CIRCUIT CONTROL - KIT

Notes:

Only two locations are available within the boiler installer wiring area for items 1 to 4, which each take up one location when fitted.

The instructions for kits3,6 and 12 to 14 are provided with the kit, all others are included in this appendix.

All configuration settings for both the boiler and option kits are fully covered in the Navistem LMS14 mini manual supplied with the boiler.

Individual kit configuration settings are covered in the relevant section of this appendix or in the associated option kit instruction.

12.1. Boiler mounted kits

12.1.1. UIN 235347 VFC PUMP CONTROL

Refer to the relevant sections of the Boiler installation manual as required when carrying out the installation.

The Pump control kit converts the demand signal from a 230V relay QXn output into a Volts Free enable signal for a circulating pump SELV Start/Stop input signal.

12.1.1.1. Kit contents

1. QXn Mains Lead
2. VFC Pump Enable Lead
3. Relay 230 V 50 Hz
4. M3 x 16 machine screws 2 off
5. M3 nuts 2 off

12.1.1.2. Boiler installation

1. Drill out the existing right-hand side hole with a 3 mm drill.
2. Put the supplied machine screw through the 3 mm hole from the rear and attach the nut loosely.
3. Attach the left-hand side (this is identified by the two electrical connections brown and blue) of the relay onto the machine screw and tighten.
4. Align the relay level with the control housing and m rk the position of the right-hand side fixing point.
5. Drill a 3 mm hole for the right-hand side fixing point of the relay, use the machine screw and nut supplied to attach the relay to the control housing.
6. Connect the cables from the left-hand side of the relay onto the required QXn, connection on the LHS boiler terminal strip.
7. Make sure that the right-hand side cable from the relay goes through the provided cable clamp.

1

2

3

12.1.1.3. Pump wiring

Note. Any of the QX1 to 3 230V relay outputs may be reconfigured as required for the installation.

Wiring options:

1. Boiler pump. For a boiler pump the VFC pump control kit mains lead may be connected to QX2. This is the default setting for a boiler pump, no configuration is required.
2. DHW pump. For a DHW pump the VFC pump control kit mains lead may be connected to QX3. This is the default setting for a DHW pump or valve, no configuration is required.

For a simple Constant temperature Heating circuit, QX1 may be reconfigured and the VFC pump control kit mains lead may be connected to QX1, but this 230V relay output will need to be configured.

12.1.1.4. Configuration for a Heating Circuit

HC operation

Line No.	Parameter	Settings
5710	Heating circuit 1	On/Off
5715	Heating circuit 2	On/Off
5721	Heating circuit 3	On/Off

HC pump

Line No.	Parameter	Settings
5890 QX1	Heat circuit pump HC1 Q2	On/Off
5891 QX2	Heat circuit pump HC2 Q6	On/Off
5892 QX3	Heat circuit pump HC3 Q20	On/Off

HC On/Off demand

Line No.	Parameter	Settings
5890 QX1	Heat circuit pump HC1 Q2	On/Off
5891 QX2	Heat circuit pump HC2 Q6	On/Off
5892 QX3	Heat circuit pump HC3 Q20	On/Off

12.1.1.5. Configuration for a Heating Circuit

HC pump

Line No.	Parameter	Settings
5731	DHW controlling element	Charging pump

12.1.2. UIN 235342 REMOTE SIGNALLING KIT FITTING INSTRUCTIONS

Refer to the relevant sections of the Boiler installation manual as required when carrying out the installation.

12.1.2.1. Install the kit as follows:

On the AGU2.550A109, make sure that the dip switches are set as ① this is the default factory setting.

- Attach the AGU 2.550A109 into the support holes between the electrical connections

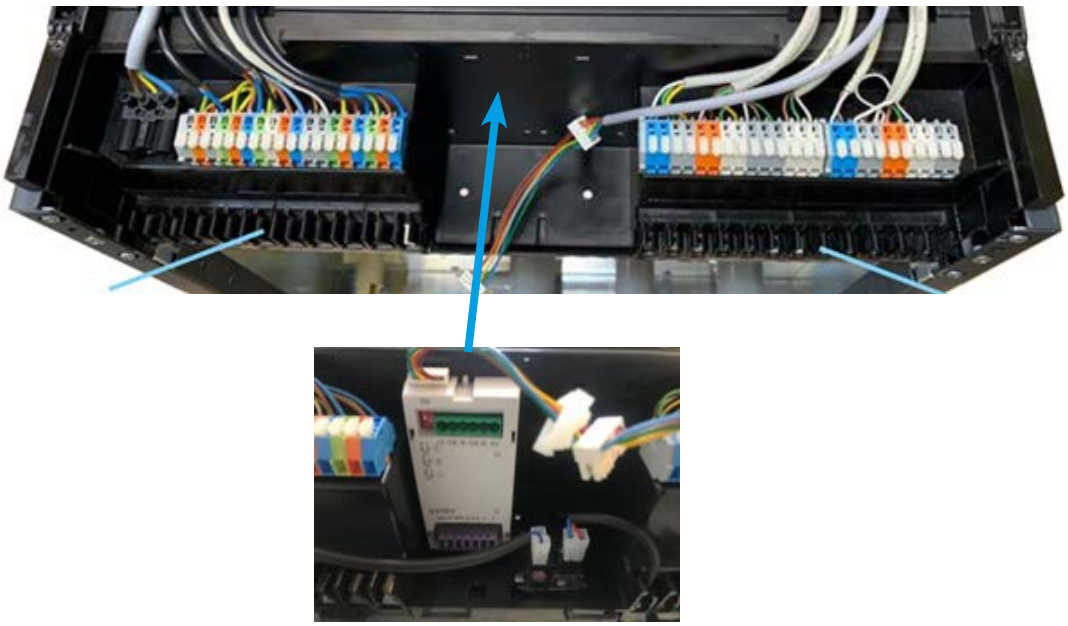

- Install the RAST5 plug into connection X1
- Install the multicoloured cable into connection X50

For **VFC** signals

Contacts on X1 L (1) and QX21 (7) can be used for the following:

Boiler flame on/Boiler demand (closed contact)

Contacts on X1 L (1) and QX22 (5) can be used for the following:

Fault errors (closed contact)

E133 flame failure

E110 temperature high limit

E132 low gas pressure

E132 flue or condensate blocked.

For **mains supply** 230V signals, connect the white lead into X1 brown wire to L (1) and blue wire N (2).

Connect the opposite end of the cable into terminal 17 live, and terminal 18 neutral, as shown.

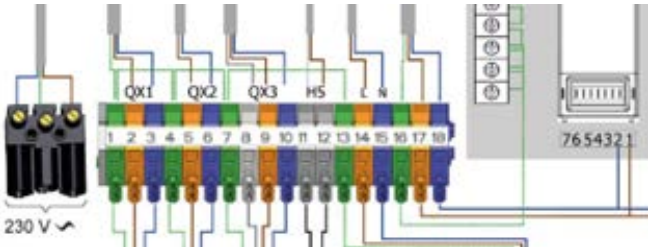

Contacts on X1 N (6) and QX21 (7) 230V can be used for the following:

Boiler flame on/Boiler demand (closed contact)

Contacts on N (4) and QX22 (5) 230V can be used for the following:

Fault errors (closed contact)

E133 flame failure

E110 temperature high limit

E132 low gas pressure

E132 flue or condensate blocked.

12.1.2.2. Extension module configurationt

12.1.3. UIN 23579 HC EXTENSION MODULE

Line No.	Parameter	Settings
6020	Function extension module 1	Multifunctional
6030	Relay output QX21 module 1	Status information K36
6031	Relay output QX22 module 1	Alarm output K10

12.1.4. UIN 235787 PWM TO 0-10V CONVERTER KIT FITTING INSTRUCTIONS

Refer to the relevant sections of the Boiler installation manual as required when carrying out the installation.

12.1.4.1. Installation

Install the kit as follows:

On the AGU2.551A109,

- Set slope 1 adjustment to full anticlockwise
- Mode UX42 jumper should be left set to position b, it has no influence on the operation of channel 1

This is the default factory setting

Attach the AGU 2.551A109 into a vacant clip-in space into the support holes between the electrical connections, only 2 clip-in devices or one clip-in and a VFC pump control relay may be fitted at any one time. Externally mounted option kits are available if required.

Install the supplied plug into the lower connection, X2

12.1.4.2. Boiler wiring

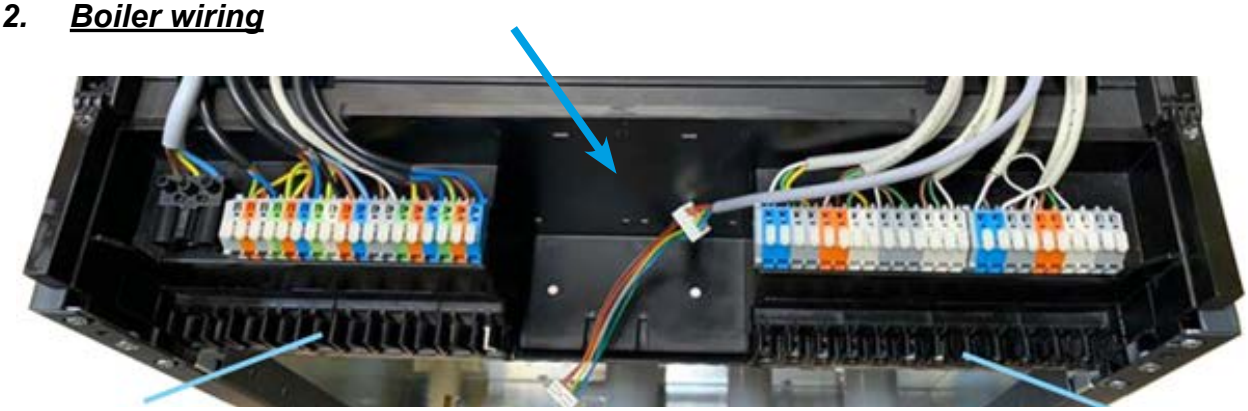

Mains voltage side PELV side

Install the multicoloured cable into connection X50

Make the following connection using the cable supplied, between the Boiler PELV installer connections and the Clip-in module X2 plug.

Boiler connector	AGU2.551 X2
19	Pin 5, M
20	Pin 6, PI41

12.1.4.3. Pump wiring

Make the following connections between the AGU2.551 and the external pump 0-10V analogue input connections.

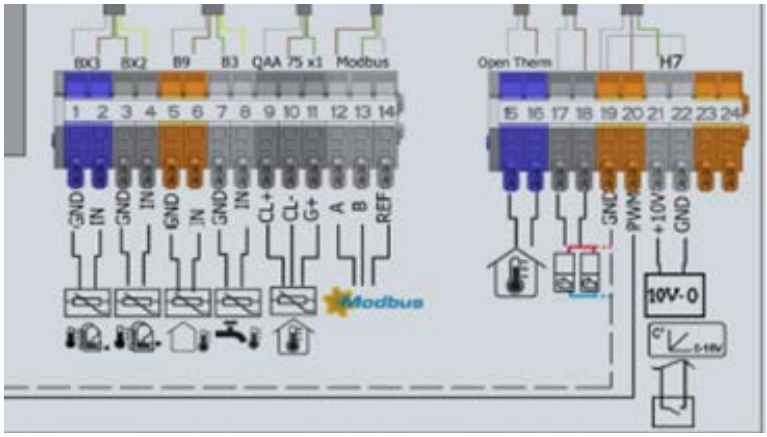

12.1.4.4. Slope 1 Settings

The adjustment of the slope for the relationship between the PWM input and the 0-10V DC output can be adjusted as shown in the graph below.

Pump connector	AGU2.551 X2
GND	Pin 1, M
0-10V control	Pin 2, UX41

12.1.5. UIN 235783 LPB Interface

Refer to the Boiler installation manual as required when carrying out the installation.

This option kit enables communication over the LPB (Local Process Bus) between a boiler and another external LPB device, boiler or External module.

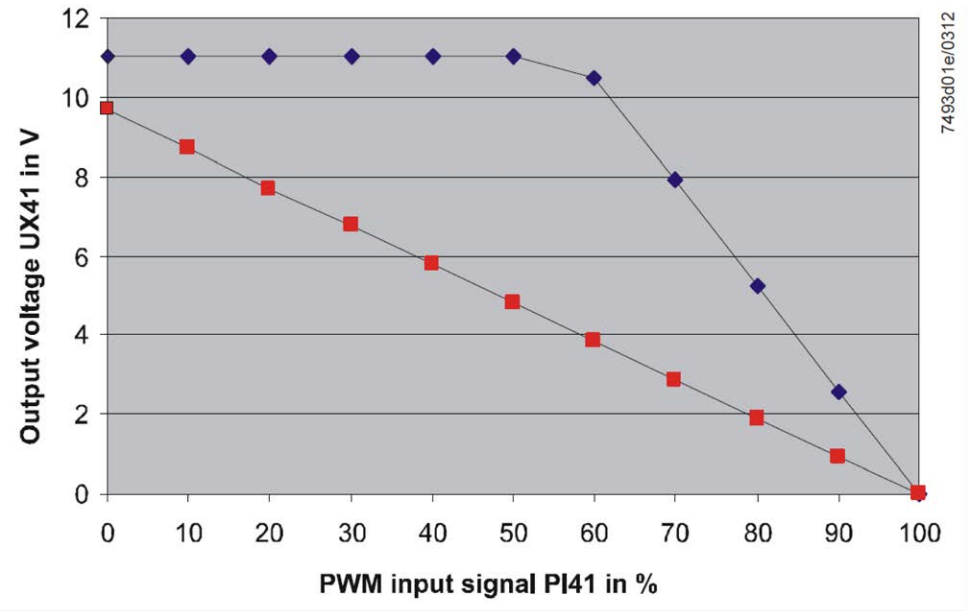

Note: For operation in a cascade, each boiler in the cascade requires an LPB interface fitting. One of the boilers must designated as a Cascade master.

12.1.5.1. Location

The location is fixed and is shown below:

(insert photograph)

For cascade operation a 2-core cable is required to be run between the Boiler LPB terminals and the associated Boiler LPB terminals, for LPB accessories between the Boiler LPB terminals and the External module LPB terminals.

Note: In an electrically noisy environment, it is recommended that a screened cable be used. The screen should only be connected to ground at one end.

12.1.5.2. Fixing

1. Remove the two left hand side cables, 14-way ribbon cable and 2 core cable
2. Remove the mounting screws from the control box and keep them
3. Fit the Ribbon cable into the OCI345, check the orientation
4. Remove the 2-way RAST5 connector from the OCI345
5. Secure the OCI345 to the control box using the two mounting screws
6. Strip the outer sheath of the 2-core cable
7. Strip the two inner conductors and crimp on ferrules
8. Secure the cables:
   DB Brown
   MB White
9. Plug the RAST5 connector back into the OCI345, note that the connector is polarised and so the screw heads face towards the control box

12.1.5.3. Wiring

For cascade operation, connect each LPB bus connection in daisy chain:

DB to DB, MB to MB, etc.

For an external module refer to the installation documentation provided with the specific option kit.

12.1.5.4. Configuration cascade

cascade master
Cascade slave

12.1.5.5. Configuration Non- cascade

Line No.	Parameter	Settings

12.1.6. UIN 235791 modbus interface

Line No.	Parameter	Settings

12.2. External kits

Line No.	Parameter	Settings

12.2.1. UIN 235781 Programmable Room Sensor

Refer to the QAA74 installation instructions, and the Boiler or External module installation manual as required when carrying out the installation.

12.2.1.1. Location

Determine the optimum location as recommended in the QAA74 installation instructions.

For basic operation a 2-core cable is only required to be run between the Room Sensor and the associated Boiler or External module.

When illumination is required a 3-core cable is needed. The additional connection for the Backlight function is DC 12V G+.

Note: When wiring to a boiler there is a limitation in the current available on the BSB bus for the 2-wire connection, this is at 40mA. A QAA74 using a 2-wire connection requires 24mA, so if more are required to be fitted and wired to the boiler then the 3-wire option must be used.

Note: In an electrically noisy environment, it is recommended that a screened cable be used. The screen should only be connected to ground at one end.

12.2.1.2. Fixing

Follow the fixing instructions as detailed.

12.2.1.3. Wiring

At the QAA74, route and make the connections as shown in figure ⑤, avoid overlapping any of the individual wires during routing from the wall outlet.

At the Boiler end make the connections 27 CL+, 28 CL-, and 29 G+ if required.

For an external module refer to the installation documentation provided with the specific option kit.

12.2.1.4. Configuration

Signal	QAA74	Boiler
DC 12V G+	1	29
GND CL-	2	28
BSB CL+	3	27

12.2.2. UIN 235781 533901457 Outdoor Temperature Sensor

Refer to the QAC34 installation instructions, and the Boiler or External module installation manual as required when carrying out the installation.

12.2.2.1. Location

Line No.	Parameter	Settings

Determine the optimum location, on a North or North West facing external wall, as recommended in the QAC34 installation instructions.

For operation a 2-core cable is only required to be run between the Outside Sensor and the associated Boiler or External module.

Note: In an electrically noisy environment, it is recommended that a screened cable be used. The screen should only be connected to ground at one end.

12.2.2.2. Sensor cable length

The sensor cable mustnotbe longer than 120m

12.2.2.3. Sensor cable size

12.2.2.4. Fixing

Follow the fixing instructions as detailed on the box.

12.2.2.5. Wiring

Cross-sectional area	Maximum length
0.25 mm^2	20 m
0.5 mm^2	40 m
1.0 mm^2	80 m
1.5 mm^2	120 m

At the QAA74, route and make the connections as shown.

At the QAC34, route and make the connections as shown.

At the Boiler end make the connections GND 23, and B9 24.

For an external module refer to the installation documentation provided with the specific option kit.

12.2.2.6. Configuration

For further configuration, refer to the LMS14 Mini controls manual section on

Signal	QAC34	Boiler
GND	M/G9	23
B9	B9	24

Compensation variants.

Line No.	Parameter	Settings
6110	Time constant building	
6650	Outside temperature source	S0/G1 (LPB seg. 0, device 1)
6100	Readjustm outside sensor	0.0 / -3.0°C to 3.0°C

12.2.3. UIN 235782 Offset Adjustable Room Sensorr

Refer to the QAA55 installation instructions, and the Boiler or External module installation manual as required when carrying out the installation.

12.2.3.1. Location

Determine the optimum location as recommended in the QAA55 installation instructions.
For operation a 2-core cable is only required to be run between the Room Sensor and the associated Boiler or External module.

Note: When wiring to a boiler there is a limitation in the current available on the BSB bus for the 2-wire connection, this is at 40mA. A QAA55 using a 2-wire connection requires 24mA.

Note: In an electrically noisy environment, it is recommended that a screened cable be used. The screen should only be connected to ground at one end.

12.2.3.2. Fixing

Follow the fixing instructions as detailed on the box.

12.2.3.3. Wiring

At the QAA55, route and make the connections as shown, avoid overlapping any of the individual wires during routing from the wall outlet.
At the Boiler end make the connections 27 CL+, 28 CL-.

Signal	QAA55	Boiler
BSB CL+	1	27
GND CL-	2	28

For an external module refer to the installation documentation provided with the specific option kit.

12.2.3.4. Configuration

Line No.	Parameter	Settings

12.2.4. UIN 235782 Offset Adjustable Room Sensor

Refer to the QAZ36 installation instructions, and the Boiler or External module installation manual as required when carrying out the installation.

12.2.4.1. Application

The Insertion Temperature Sensor can be used for several applications where a temperature measurement for system operation is required. Common examples are:

a. Cascade – Common flow sensor, B10
b. DHW tank sensor, B3
c. DHW outlet flow sensor, B38
d. Heating circuit flow temperature sensor, B1 B12 B14

12.2.4.2. Location

Determine the optimum location for the sensor pocket and fit.

If additional cable length is required, a 2-core cable is only required to be run between the Insertion Temperature Sensor and the associated Boiler or External module. Use an appropriate electrical connection box, securely mounted, in which to make the connection between the sensor cable and the additional cable.

Note: In an electrically noisy environment, it is recommended that a screened cable be used. The screen should only be connected to ground at one end.

12.2.4.3. Sensor cable length

DHW tank sensor/outlet sensor, B3/B38 must not be longer than 10m.

12.2.4.4. Sensor cable size

Cross-sectional area	Maximum length
0.25 mm^2	20 m
0.5 mm^2	40 m
1.0 mm^2	80 m
1.5 mm^2	120 m

12.2.4.5. Fixing

Follow the fixing instructions as detailed on the box.

12.2.4.6. Wiring

At the Boiler end make the connections as required.

Signal	Boiler
GND	19
BX3	20
GND	21
BX2	22
GND	25
B3/B38	26

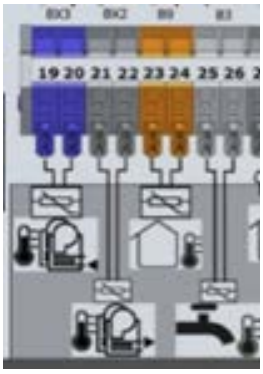

For an external module refer to the installation documentation provided with the specific option kit.

12.2.4.7. Configuration

Line No.	Parameter	Settings
5931	Sensor input BX2	As required
5932	Sensor input BX3	As required
DHW sensor B3/B38		
5730	DHW sensor	As required: DHW sensor B3/~~Thermostat~~/ DHW outlet sensor B38
5131	Comparison temperature transfer	As required: DHW sensor B3/DHW outlet sensor B38
Cascade - Common flow sensor (on cascade master)		
6117	Central setp compensation	20°C/1..100°C
6630	Cascade master	Always

12.2.5. UIN 235782 533901594 Strap on Temperature Sensor

Refer to the QAD36 installation instructions, and the Boiler or External module installation manual as required when carrying out the installation.

12.2.5.1. Application

The Strap on Temperature Sensor may be used for several applications where a temperature measurement for system operation is required. Common examples are:

a. Cascade – Common flow sensor, B10

b. DHW tank sensor, B3

c. DHW outlet flow sensor, B38

d. Heating circuit flow temperature sensor, B1 B12 B14

Note: . It is recommended that a Strap on Sensor should not be used where more accurate temperature control is required.

12.2.5.2. Location

Determine the optimum location for the sensor pocket and fit.

For operation a 2-core cable is only required to be run between the Strap on Sensor and the associated Boiler or External module.

Note: In an electrically noisy environment, it is recommended that a screened cable be used. The screen should only be connected to ground at one end..

12.2.5.3. Sensor cable length

DHW tank sensor/outlet sensor, B3/B38 must not be longer than 10m.
All other sensors must not be longer than 120m.

12.2.5.4. Sensor cable size

Cross-sectional area	Maximum length
0.25 mm^2	20 m
0.5 mm^2	40 m
1.0 mm^2	80 m
1.5 mm^2	120 m

12.2.5.5. Fixing

Follow the fixing instructions as detailed on the box.

12.2.5.6. Wiring

At the Boiler end make the connections as required.

Signal	Boiler
GND	19
BX3	20
GND	21
BX2	22
GND	25
B3/B38	26

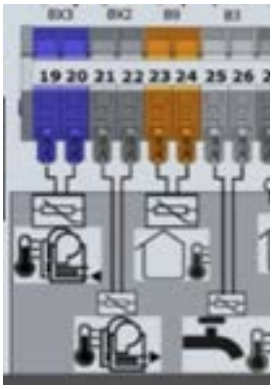

For an external module refer to the installation documentation provided with the specific option kit.

12.2.5.7. Configuration

Line No.	Parameter	Settings
5931	Sensor input BX2	As required
5932	Sensor input BX3	As required
DHW sensor B3/B38		
5730	DHW sensor	As required: DHW sensor B3/~~Thermostat~~/ DHW outlet sensor B38
5131	Comparison temperature transfer	As required: DHW sensor B3/DHW outlet sensor B38
Cascade - Common flow sensor (on cascade master)		
6117	Central setp compensation	20°C/1..100°C
6630	Cascade master	Always

13. APPENDIX A

Product data ≤ 70 kW

Product reference					
Trade mark			ACV		
Model			40	60	70
Code			82642	82643	82659
Nominal power	Prated	*kW*	39.0	54.0	68.0
Seasonal energy efficiency class	Classe		A	A	A
Seasonal energy efficiency	η_s (PCS)	%	92	92	92
Useful heat production					
At nominal power and in 80°C / 60°C regime	P_4	*kW*	33.8	53.4	67.8
	η_4 (PCS)	%	87.5	87.5	87.4
At 30% nominal power and in 30°C return temperature regime	P_1	*kW*	13.0	17.9	22.7
	η_1 (PCS)	%	97.6	97.4	97.5
Auxiliary electricity consumption					
Under full load	elmax	*kW*	0.1	0.171	0.22
Under partial load	elmin	*kW*	0.046	0.077	0.029
In standby mode	P_{SB}	*kW*	0.004	0.004	0.004
Other properties					
Heat loss	Pstby	*kW*	0.052	0.054	0.056
Nitrogen oxide emissions	NOx (PCS)	*mg/kWh*	36	39	39
Annual energy consumption	QHE	*GJ*	121	168	211
Weighted sound power level Lw(A) at Pnom / G20	L_{WA}	*dB(A)*	50	59	57

Product data ≤ 400 kW

Product reference						
Trade mark			ACV			
Model			80	100	120	150
Nominal power	Prated	*kW*	78.0	94.0	117.0	142.0
Useful heat production						
At nominal power and in 80°C / 60°C regime	P_4	*kW*	77.8	93.4	116.8	141.1
	η_4 (PCS)	%	87.7	87.7	87.7	87.7
At 30% nominal power and in 30°C return temperature regime	P_1	*kW*	26.0	31.2	39.0	47.2
	η_1 (PCS)	%	97.5	97.5	97.5	97.7
Auxiliary electricity consumption						
Under full load	elmax	*kW*	0.178	0.251	0.365	0.55
Under partial load	elmin	*kW*	0.051	0.057	0.049	0.098
In standby mode	P_{SB}	*kW*	0.004	0.004	0.003	0.003
Other properties						
Heat loss	Pstby	*kW*	0.063	0.063	0.072	0.069
Nitrogen oxide emissions	NOx (PCS)	*mg/kWh*	39	39	39	39
Weighted sound power level Lw(A) at Pnom / G20	L_{WA}	*dB(A)*	65	65	65	59

14. INSTALLATION, COMMISSIONING & SERVICE RECORD LOG BOOK

Your log book

IMPORTANT

Failure to install & commission this appliance to the manufacturer's instructions may invalidate the warranty. This does not affect your statutory rights.

The use of this Log is to enable the safety features of this boiler to be proven; a principle that is enshrined in health and safety law and endorsed by the Building Regulations, Health & Safety Executive as well as Gas Safe, OFTEC and TRANSCO.

COMMISSIONING REPORT - GAS ATMOSPHERIC / MODULAR BOILERS

Please return a copy to Commercial Sales Dept.

Customer Name	**Site Name**
Address	**Address** .....
.....	.....
.....	.....
Tel/Fax No.	**Tel/Fax No.** .....

Agent ..... ***Agent Account No.*** .....

Commissioning Date ..... ***Job No.*** .....

Boiler Model and Size		
Fuel Type		
Option Kits Fitted?	YES	NO
Please state which		

Is ventilation to BS 5440 / 6644?	YES	NO	
High level (cm²)		**Low level** (cm2)	
Direct to outside air?	YES	NO	

Flue type	OF	ID	FD	RS			
Height (m)		**Size (mm)**					
Mat'l		**Insul.**	YES	NO	**Stabiliser**	YES	NO

Boiler serial no.							
Boiler output OR Premix gas - module		Low 1	High 2	Low 3	High 4	Low 5	High 6
Gas inlet pressure (static)	mbar						
Gas manifold pressure dynamic - single boiler firing	mbar						
Gas manifold pressure dynamic - all boilers firing	mbar						
Burner pressure	mbar						
Gas rate	m^3/hr						
Gas / Air pressure ratio							
Detection signal	µA						
Flue gas temperature (gross)	°C						
Ambient temperature	°C						
CO_2	%						
CO	ppm						
CO / CO_2 ratio							
Water flow temperature	°C						
Water return temperature	°C						
Temp. difference	°C						
Control stat operation checked and set to:	°C						
Limit stat operation checked and set to:	°C						
Lockout and safety functions checked							
Flue draught max and min firing conditions	mbar						
Flue checked for spillage							
Flue damper settings (if fitted)							
Condensate drain connected / syphon fitted							

ENGINEER's NOTES

Engineer Name (PRINT PLEASE)	Engineer signature
Customer Name (PRINT PLEASE)	Customer signature

SERVICE / REPAIR RECORD SHEET

Date:	**NOTES**
Job No.	
Boiler Model and Type	
Boiler Serial No.	

ITEMS TO BE CHECKED AGAINST INITIAL COMMISSIONING FIGURES

Gas inlet pressure (static)	mbar		Burner Pressure	mbar	
Gas inlet pressure (dynamic) - 1 boiler	mbar		Detection Signal	µA	
Gas inlet pressure (dynamic) - all boilers	mbar		Flue gas temp.	^{0}C	
CO_2	%		Ambient temp.	^{0}C	
CO	%		Flue Draught	mbar	
Control stat setting			Water / Other safety interlocks proved		
Temp diff	^{0}C				

Engineer Name (PRINT PLEASE)	Engineer signature
Company Name	Company tel
Customer Name (PRINT PLEASE)	Customer signature

SERVICE / REPAIR RECORD SHEET

Date:	**NOTES**
Job No.	
Boiler Model and Type	
Boiler Serial No.	

ITEMS TO BE CHECKED AGAINST INITIAL COMMISSIONING FIGURES

Gas inlet pressure (static)	mbar		Burner Pressure	mbar	
Gas inlet pressure (dynamic) - 1 boiler	mbar		Detection Signal	µA	
Gas inlet pressure (dynamic) - all boilers	mbar		Flue gas temp.	^{0}C	
CO_2	%		Ambient temp.	^{0}C	
CO	%		Flue Draught	mbar	
Control stat setting			Water / Other safety interlocks proved		
Temp diff	^{0}C				

Engineer Name (PRINT PLEASE)	Engineer signature
Company Name	Company tel
Customer Name (PRINT PLEASE)	Customer signature

SERVICE / REPAIR RECORD SHEET

Date:	**NOTES**
Job No.	
Boiler Model and Type	
Boiler Serial No.	

ITEMS TO BE CHECKED AGAINST INITIAL COMMISSIONING FIGURES

Gas inlet pressure (static)	mbar		Burner Pressure	mbar	
Gas inlet pressure (dynamic) - 1 boiler	mbar		Detection Signal	µA	
Gas inlet pressure (dynamic) - all boilers	mbar		Flue gas temp.	^{0}C	
CO_2	%		Ambient temp.	^{0}C	
CO	%		Flue Draught	mbar	
Control stat setting			Water / Other safety interlocks proved		
Temp diff	^{0}C				

Engineer Name (PRINT PLEASE)	Engineer signature
Company Name	Company tel
Customer Name (PRINT PLEASE)	Customer signature

SERVICE / REPAIR RECORD SHEET

Date:	**NOTES**
Job No.	
Boiler Model and Type	
Boiler Serial No.	

ITEMS TO BE CHECKED AGAINST INITIAL COMMISSIONING FIGURES

Gas inlet pressure (static)	mbar		Burner Pressure	mbar	
Gas inlet pressure (dynamic) - 1 boiler	mbar		Detection Signal	µA	
Gas inlet pressure (dynamic) - all boilers	mbar		Flue gas temp.	^{0}C	
CO_2	%		Ambient temp.	^{0}C	
CO	%		Flue Draught	mbar	
Control stat setting			Water / Other safety interlocks proved		
Temp diff	^{0}C				

Engineer Name (PRINT PLEASE)	Engineer signature
Company Name	Company tel
Customer Name (PRINT PLEASE)	Customer signature

ACV UK
St.David's Business Park
Dalgety Bay
KY11 9PF, Fife
United Kingdom
Phone. : +44 (0)1383 820100
Fax : +44 (0)1383 820180
uk.sales@acv.com
www.acv.com

ACV adopts a policy of continuous improvement in the design and performance of its products.
Therefore, the right is reserved to vary specifications without notice

Material subject to change without notice - Non-binding document - 00U077428690-D (04.11.2024)